iGEM TORONTO



Ages/edades

19+

YYZ2026



Stirring



3D Printing





OD Subassembly



Vial Subassembly





Circuit Board



Housings





Stirring



2x
Neodymium
magnet



1x
CFM-4010B-065-215-22





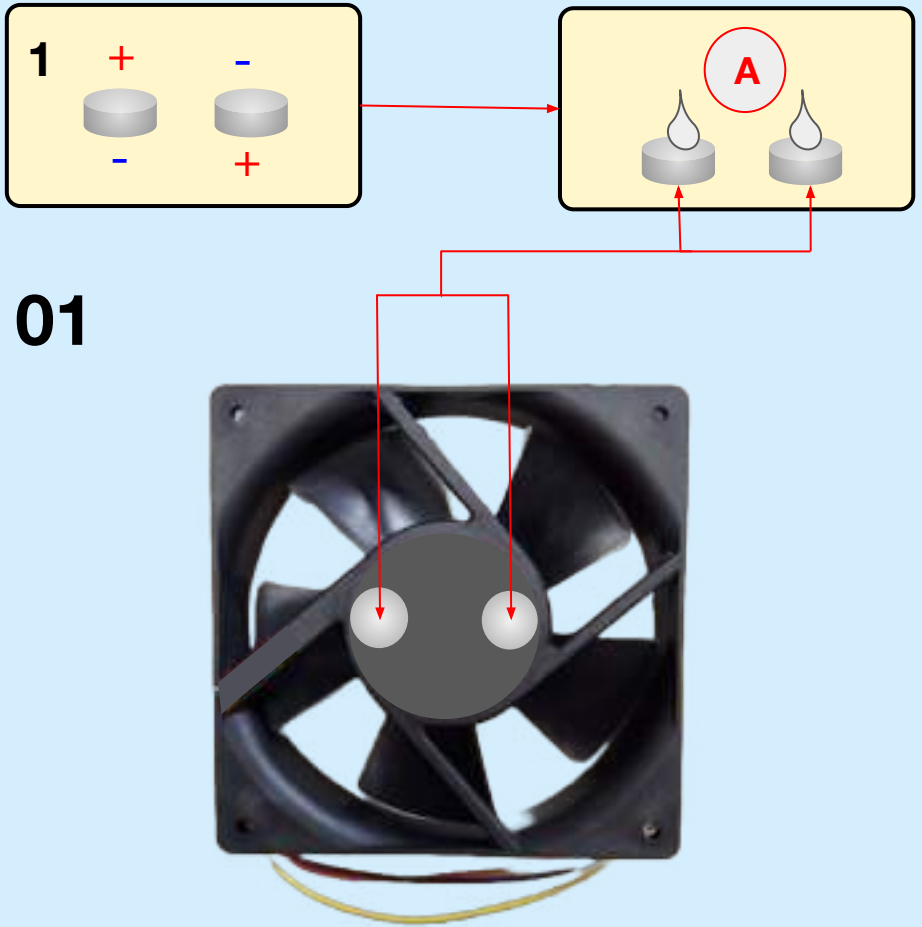



3D Printing



294.28g
PLA Filament



7.34g
Onyx Filament



(min. 250 × 210 × 220 mm) 3D printer

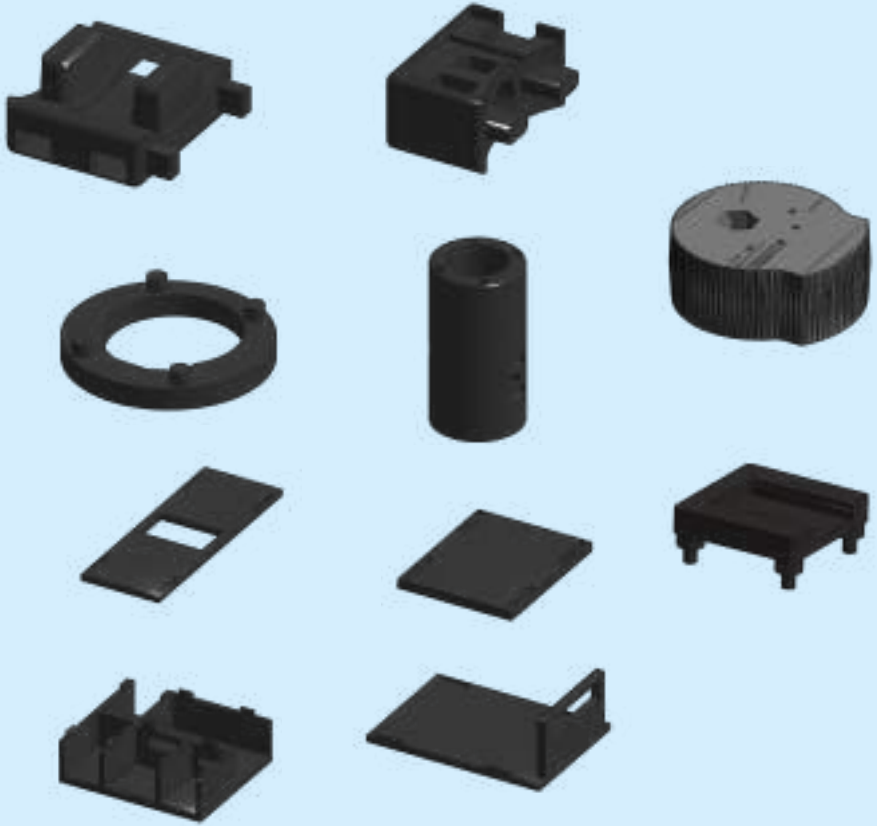

Link



OD Subassembly

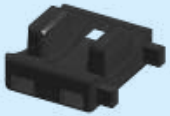

1x
Collecting OD Housing

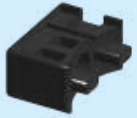

1x
Ref. OD Housing



1x
Vial OD Housing



1x
LED



2x
AS7343 Sensor



1



2

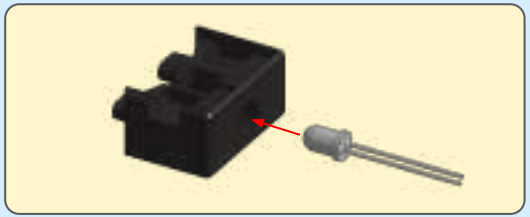

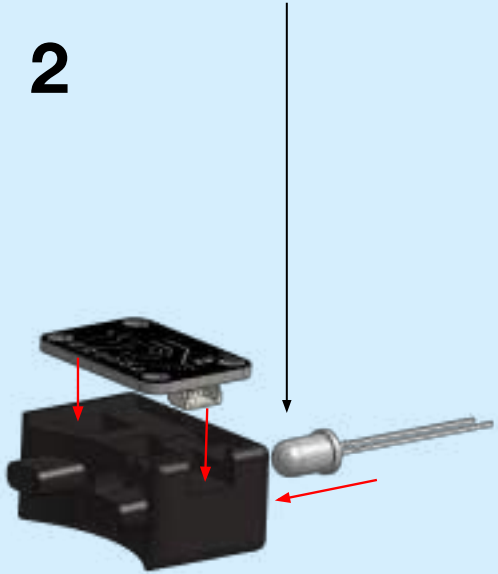

3

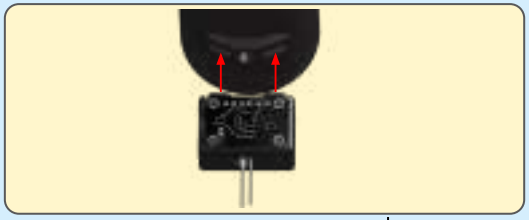





Vial Subassembly



1x
Vial



1x
Lid cap



1-3x
Luer Lock

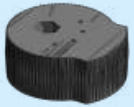

1x
Lid



1x
Stir Bar



1-3x
18 Gauge Needle





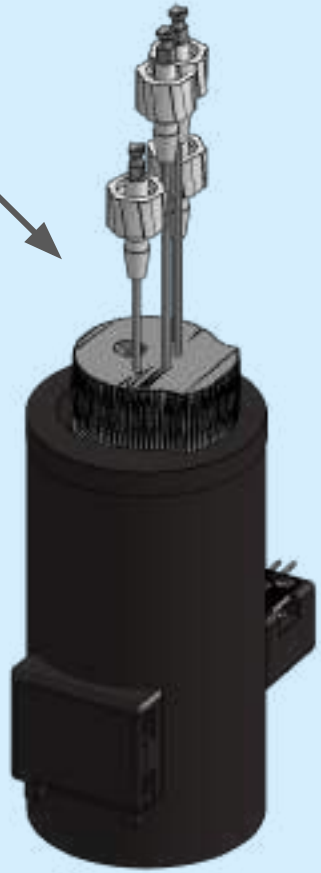

1

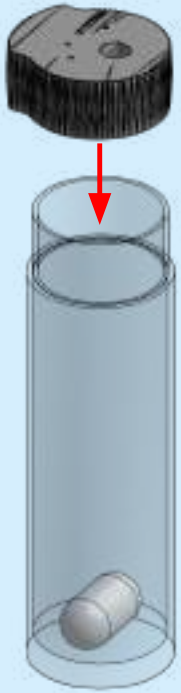

2

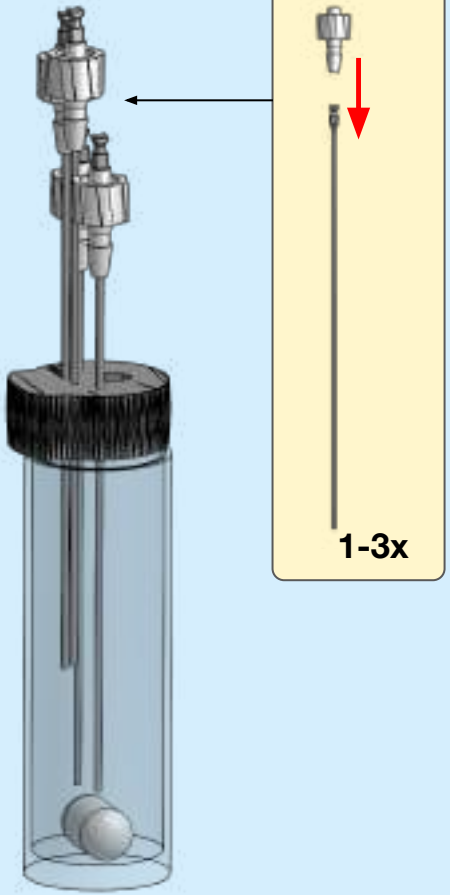

3

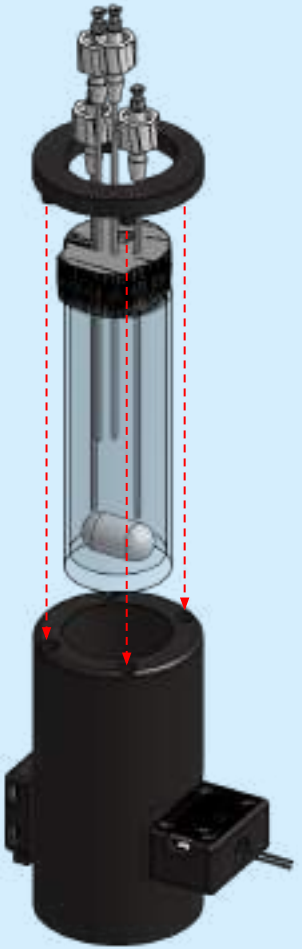



Circuit Board



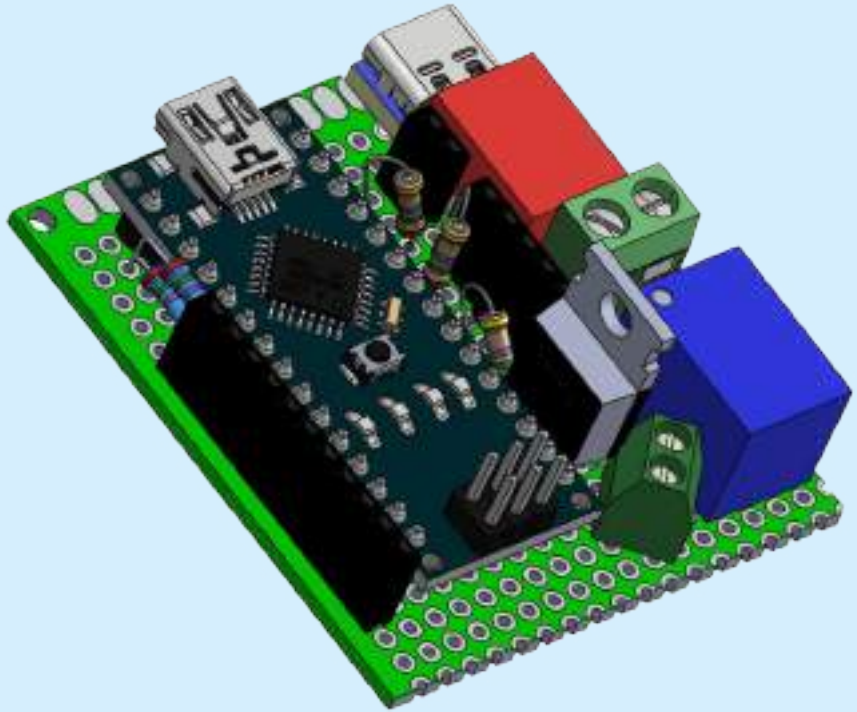



1x
90 × 70 mm protoboard



1x
Arduino Nano

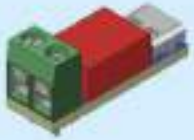

1x
PD/QC trigger board



1x
SRSZ-05VDC-SH relay



1x
2-pin female header



1x
3-pin female header



2x
8-pin female header



1x
3.5 mm screw terminal



1x
330 Ω resistor



1x
1 kΩ resistor



1x
2.2 kΩ resistor



2x
4.7 kΩ resistor



1x
TIP142 transistor



1x
2N7000 MOSFET



1x
1N5819 diode



2x
Jumper wire

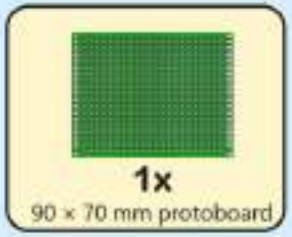

1

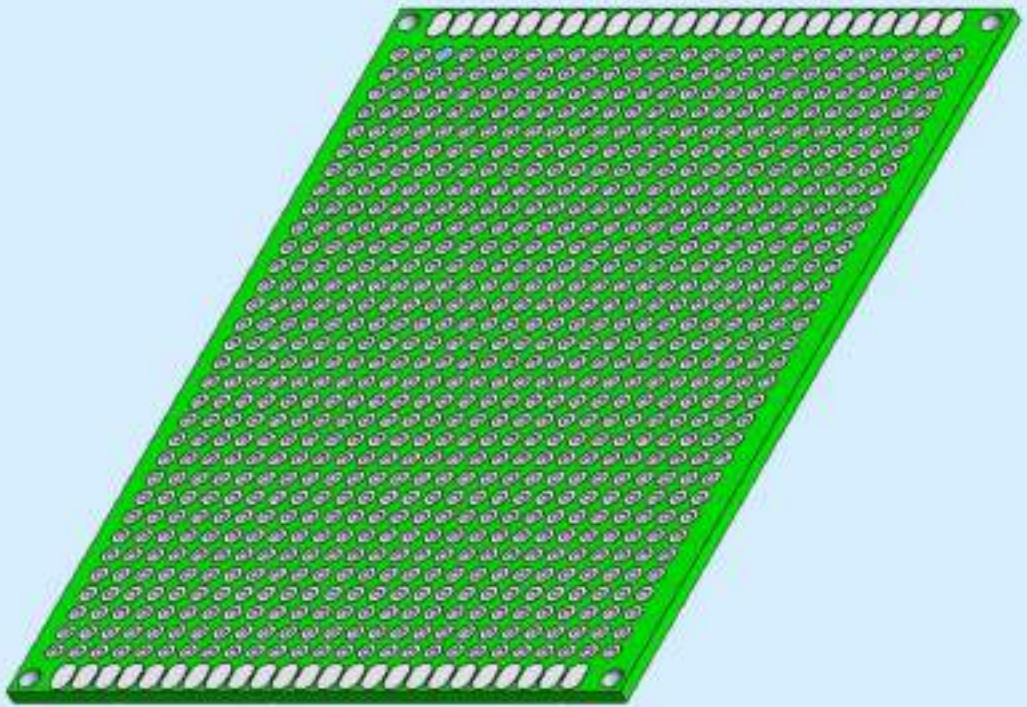



1x
Arduino Nano

2

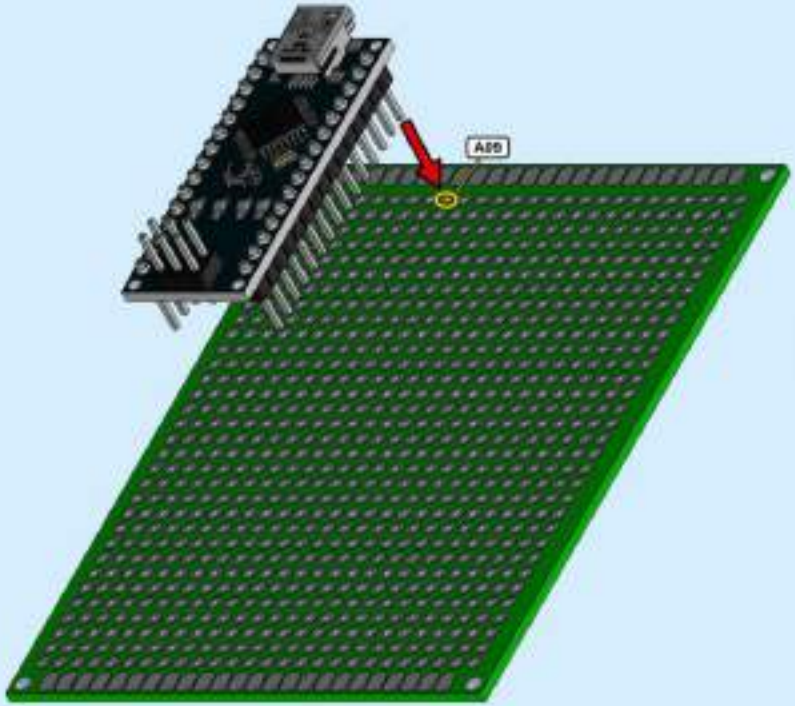



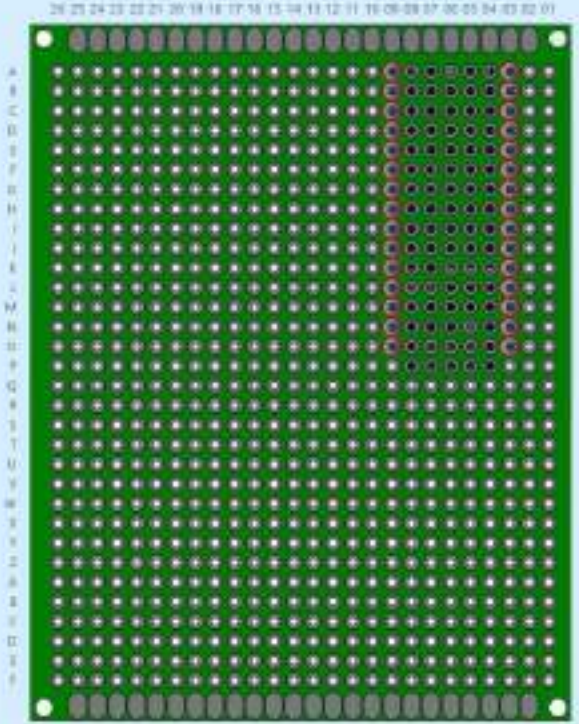



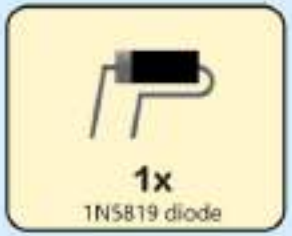
1x
1N5819 diode

3

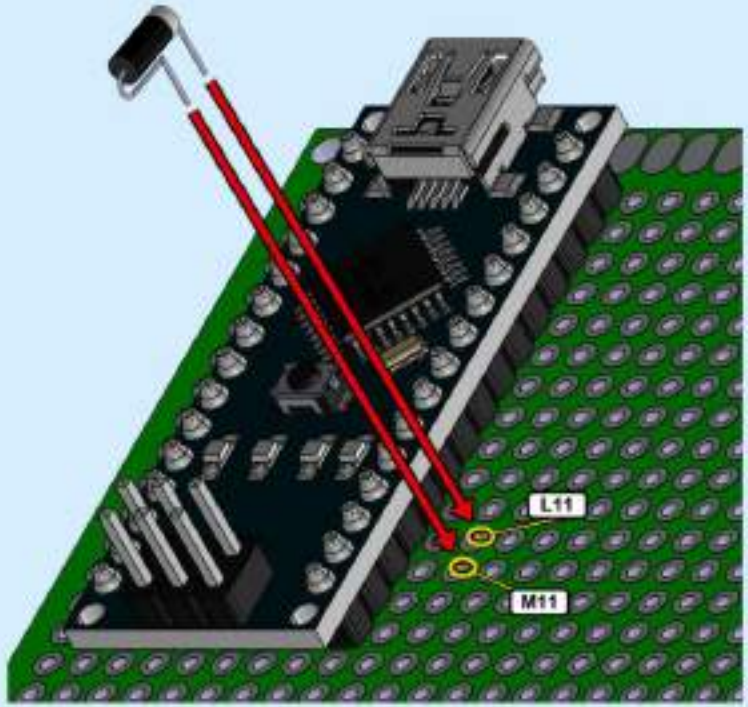
L11
M11



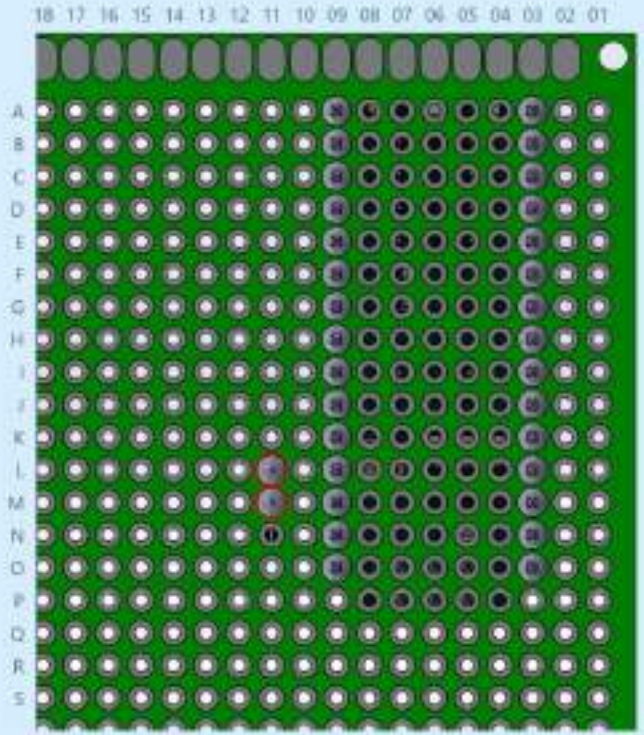
18 17 16 15 14 13 12 11 10 09 08 07 06 05 04 03 02 01
A
B
C
D
E
F
G
H
I
J
K
L
M
N
O
P
Q
R
S



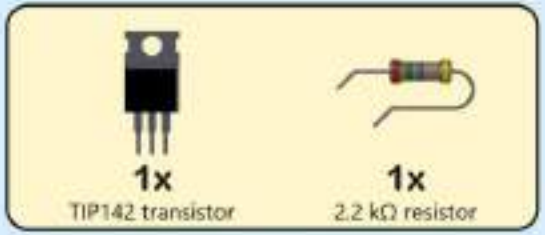
1x
TIP142 transistor
1x
2.2 kΩ resistor

4

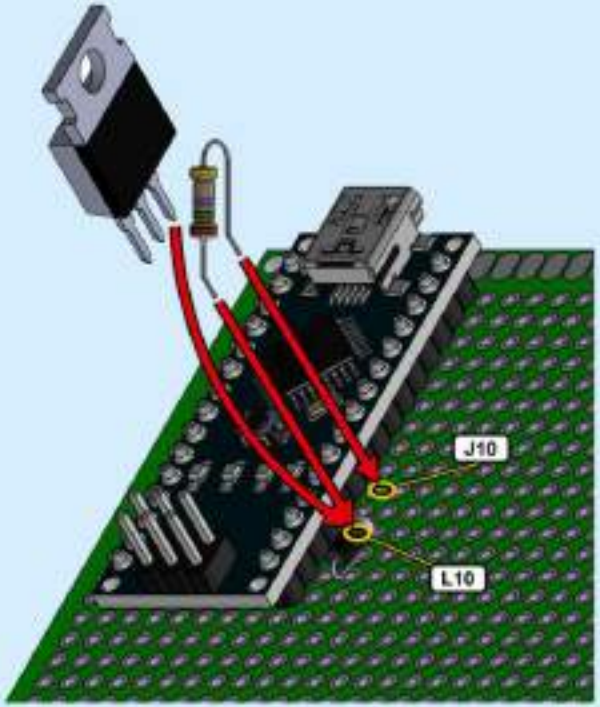
J10
L10

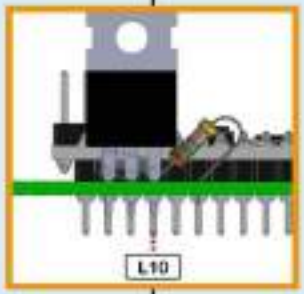
L10



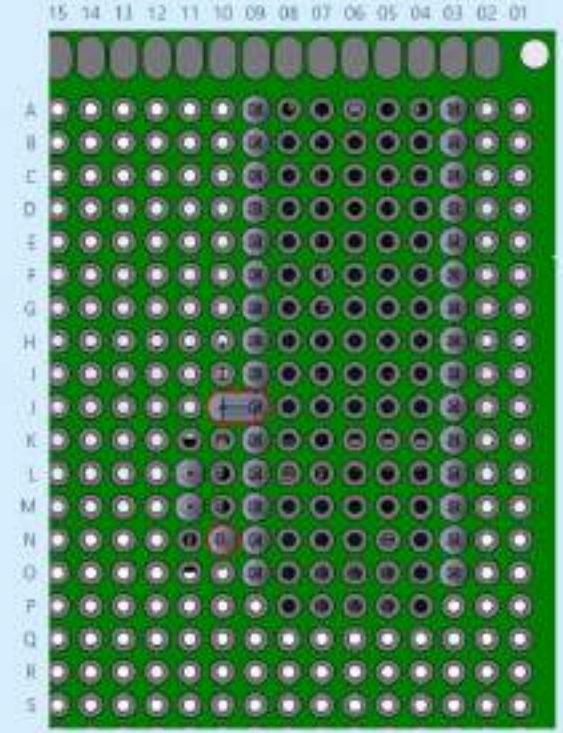
15 14 13 12 11 10 09 08 07 06 05 04 03 02 01
A
B
C
D
E
F
G
H
I
J
K
L
M
N
O
P
Q
R
S





1x
3.5 mm screw terminal

16

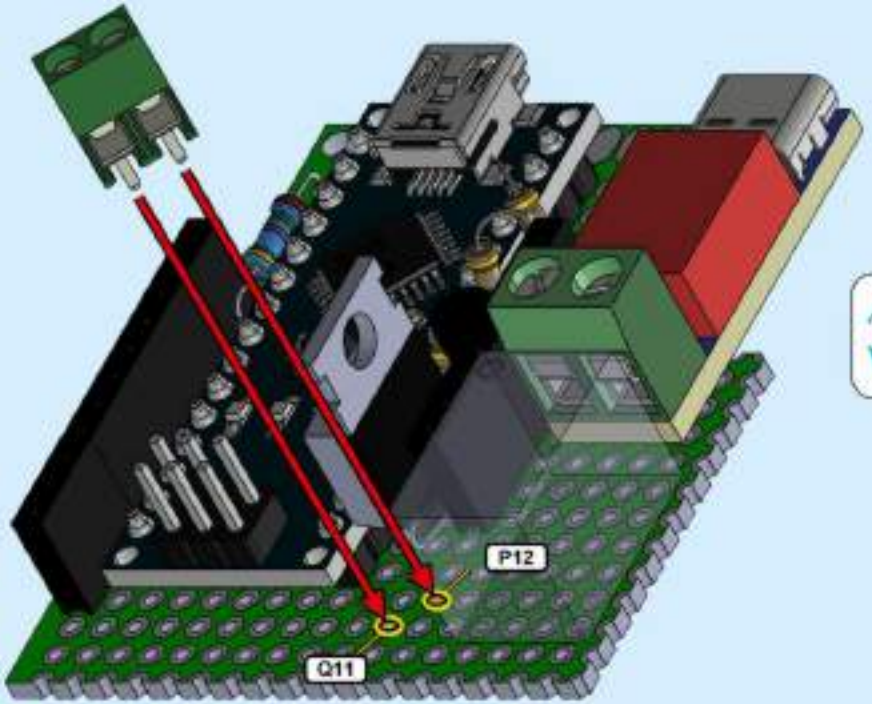

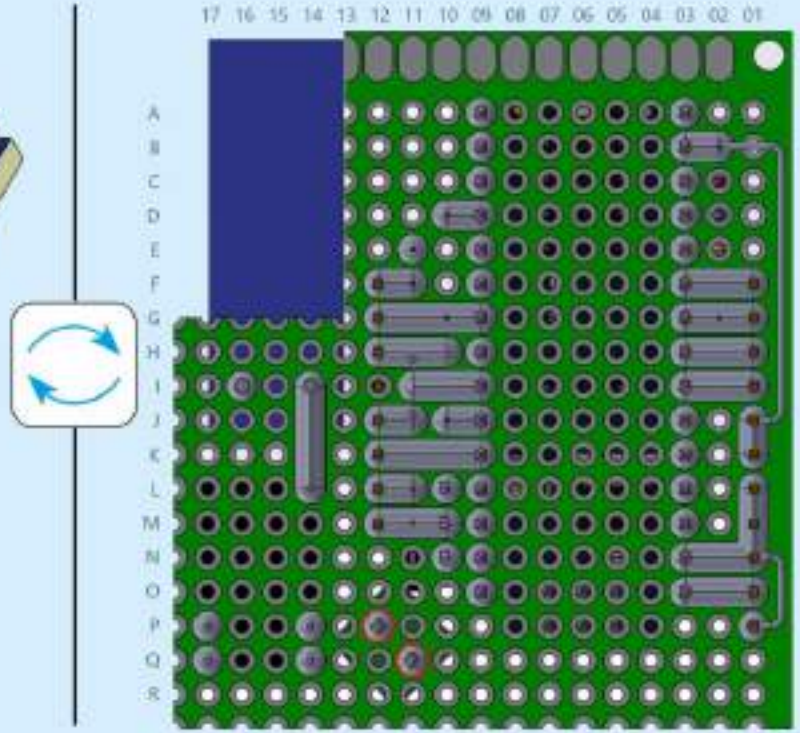



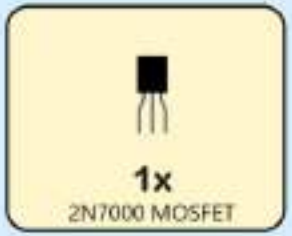
1x
2N7000 MOSFET

5

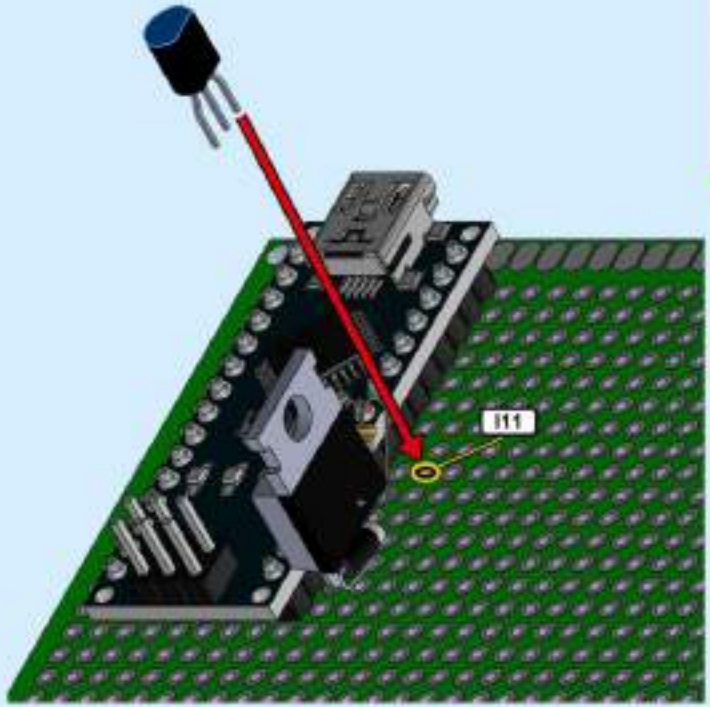
J11



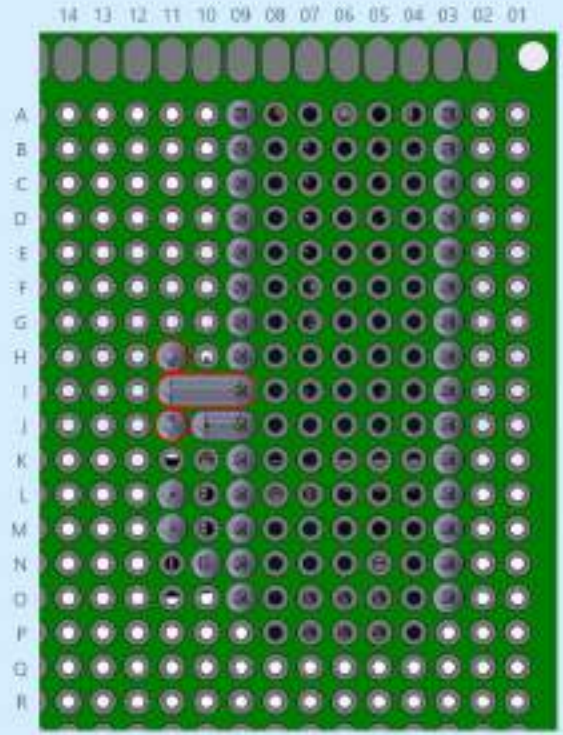
14 13 12 11 10 09 08 07 06 05 04 03 02 01
A
B
C
D
E
F
G
H
I
J
K
L
M
N
O
P
Q
R



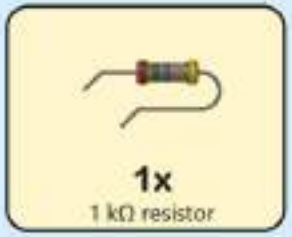

1x
1 kΩ resistor

6

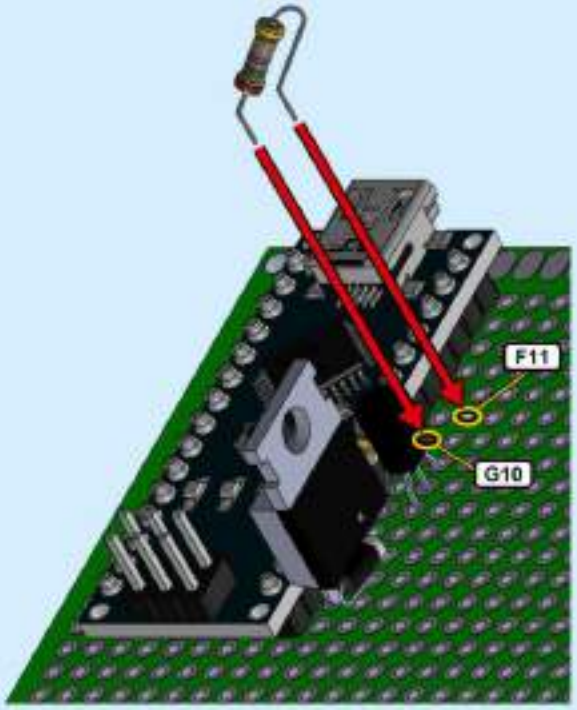



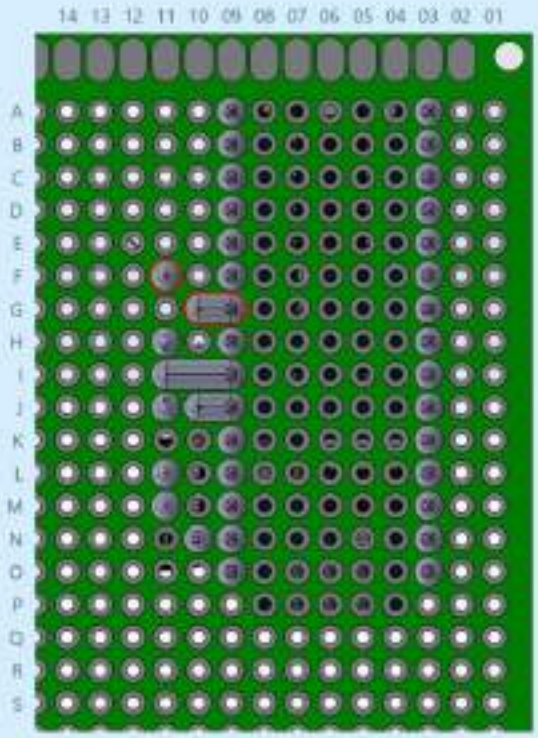



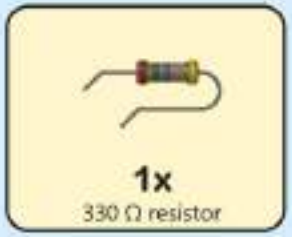

1x
330 Ω resistor

7

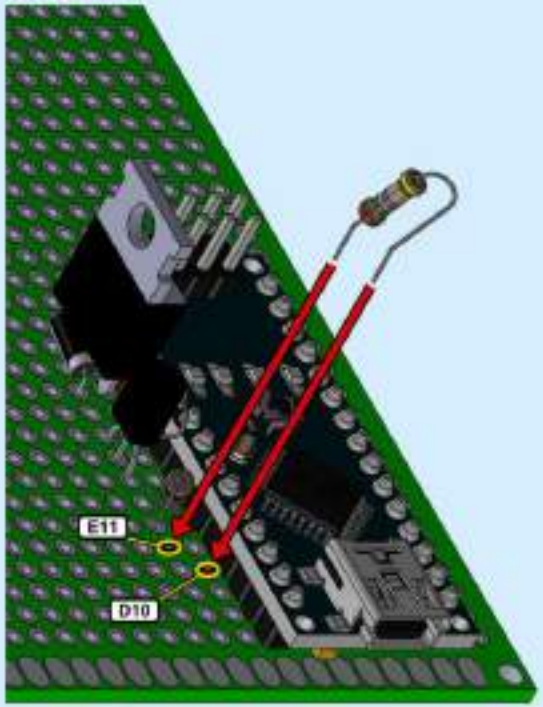



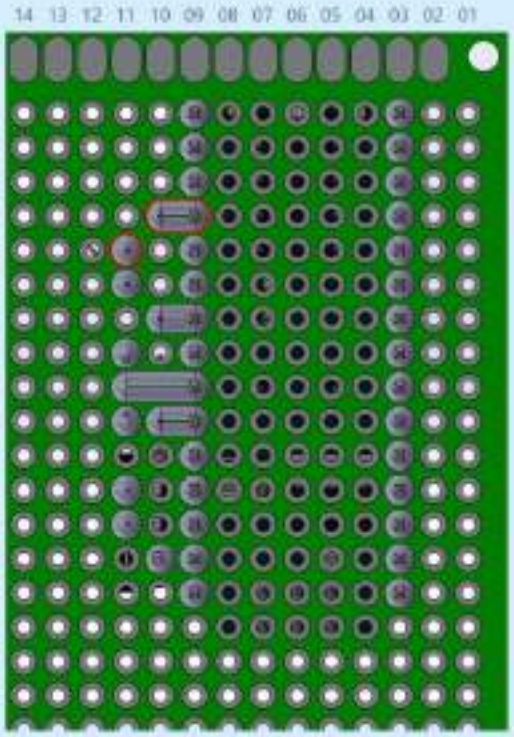



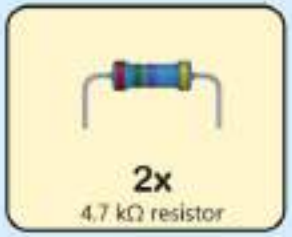

2x
4.7 kΩ resistor

8

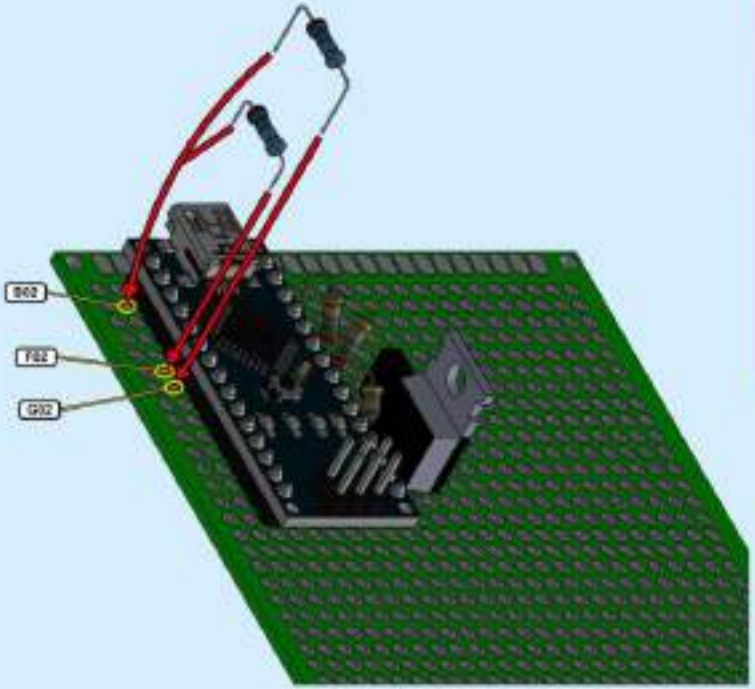

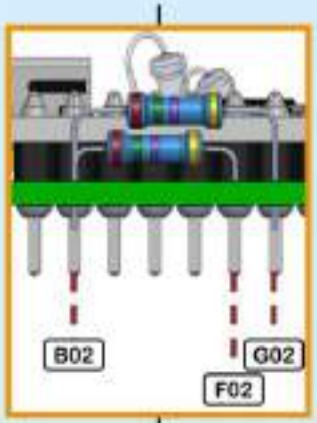



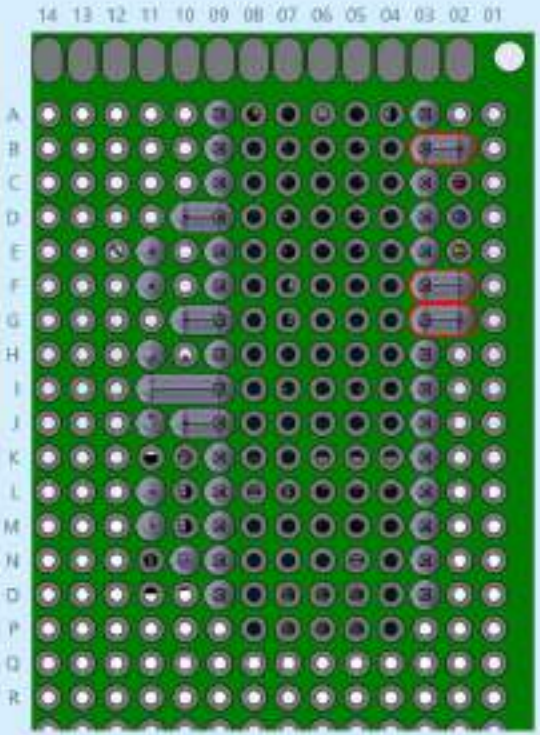



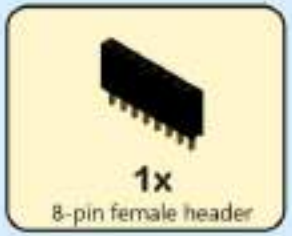

1x
8-pin female header

9

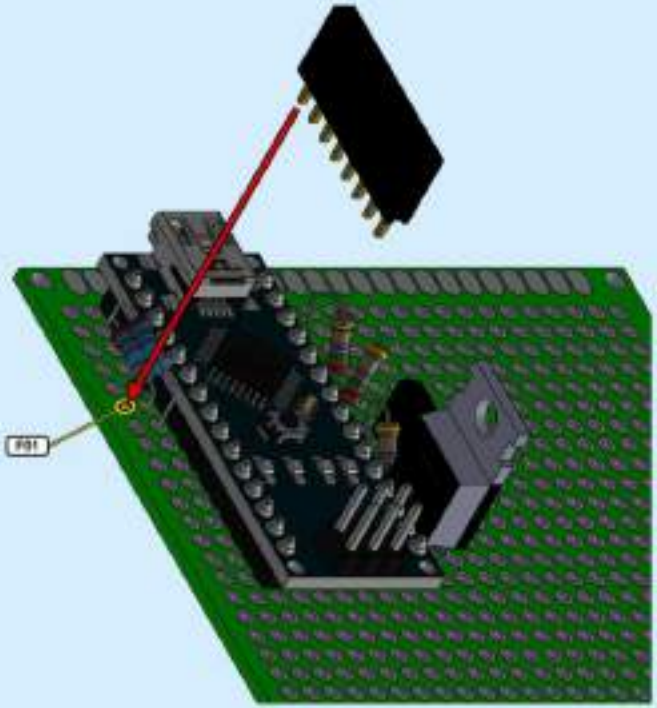



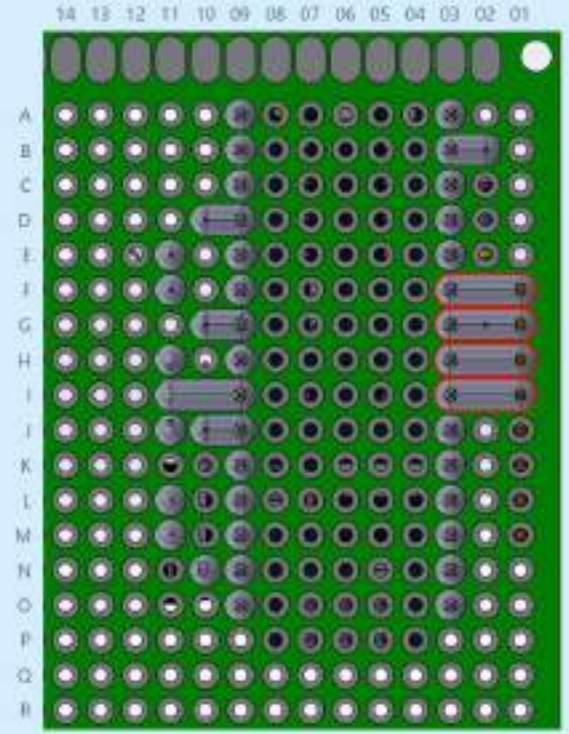



10

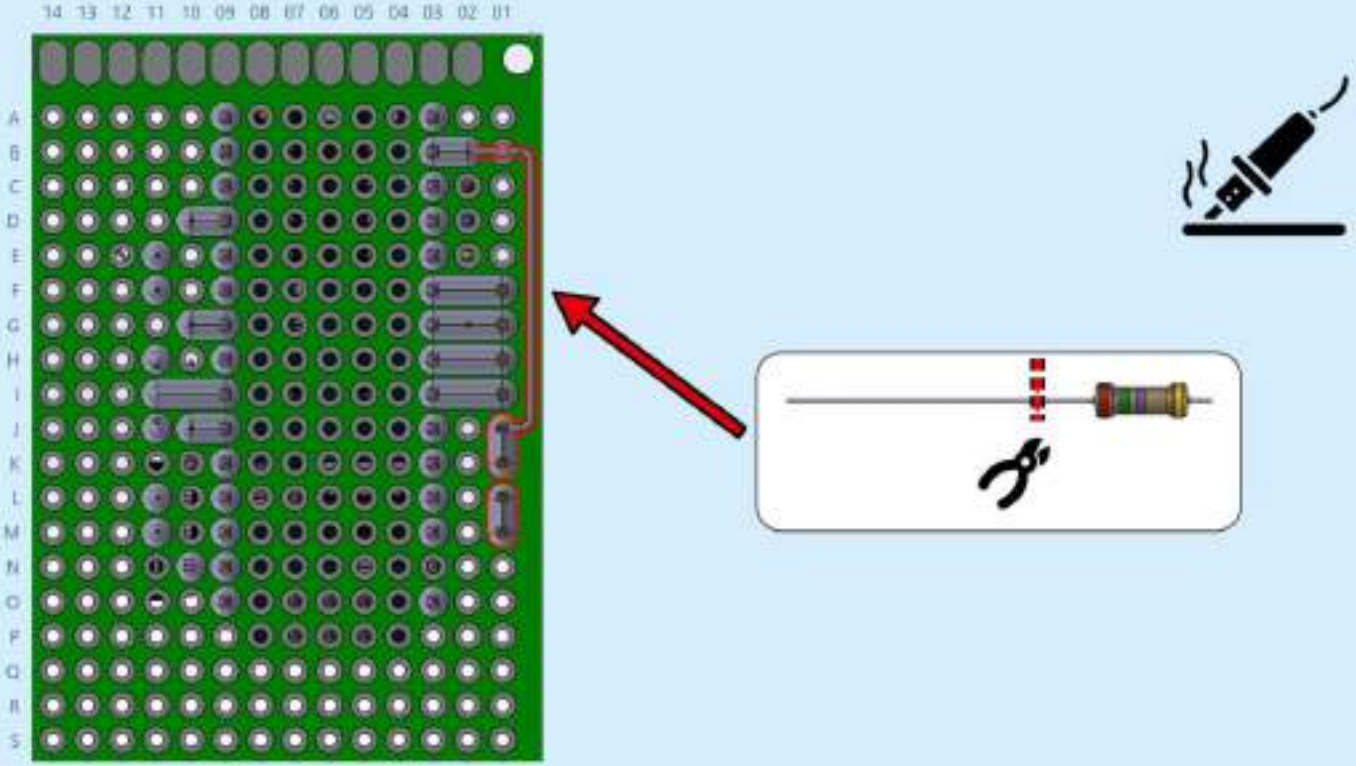

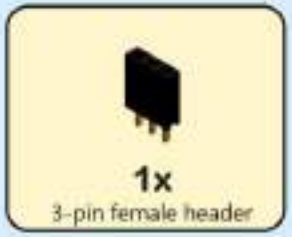

1x
3-pin female header

11

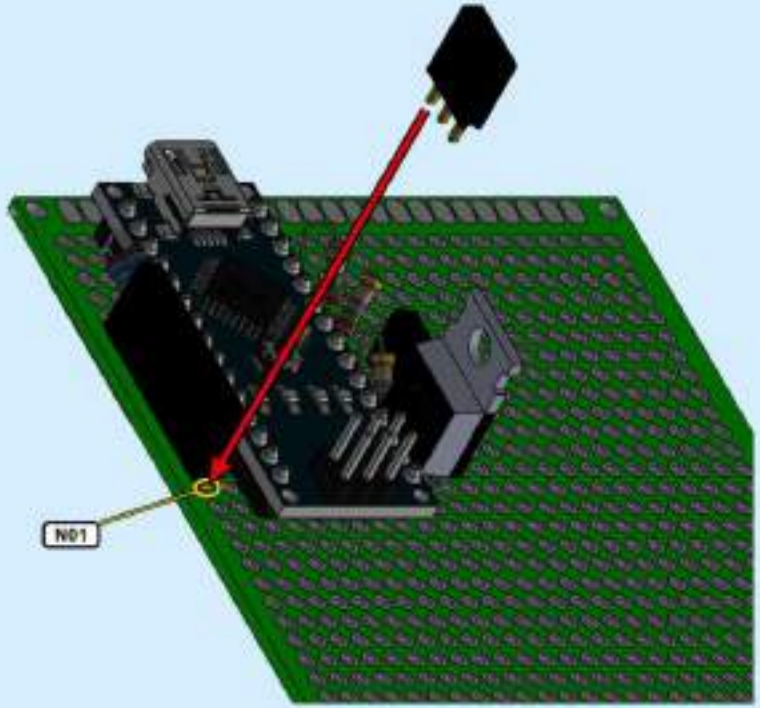



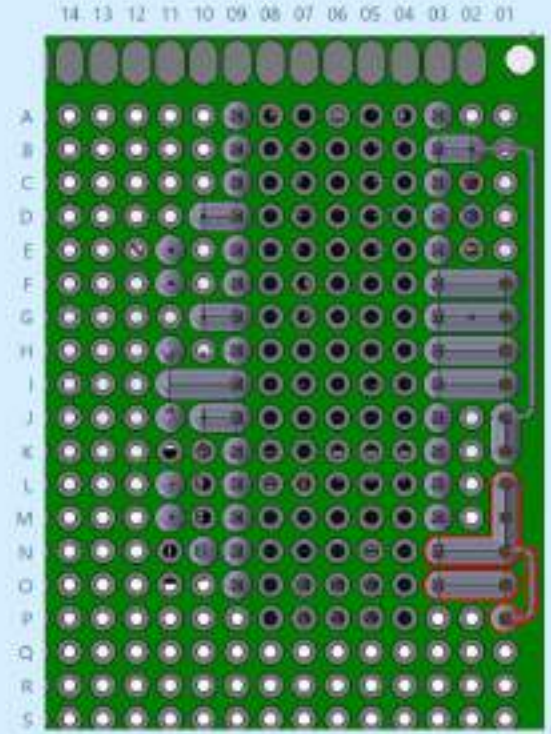



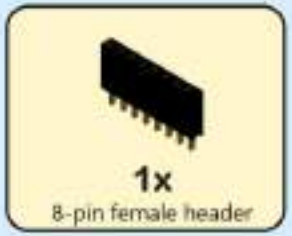

1x
8-pin female header

12

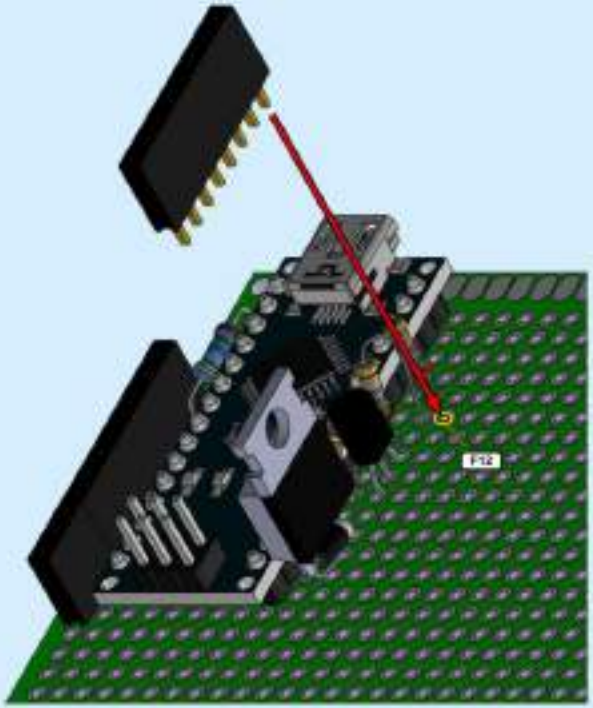



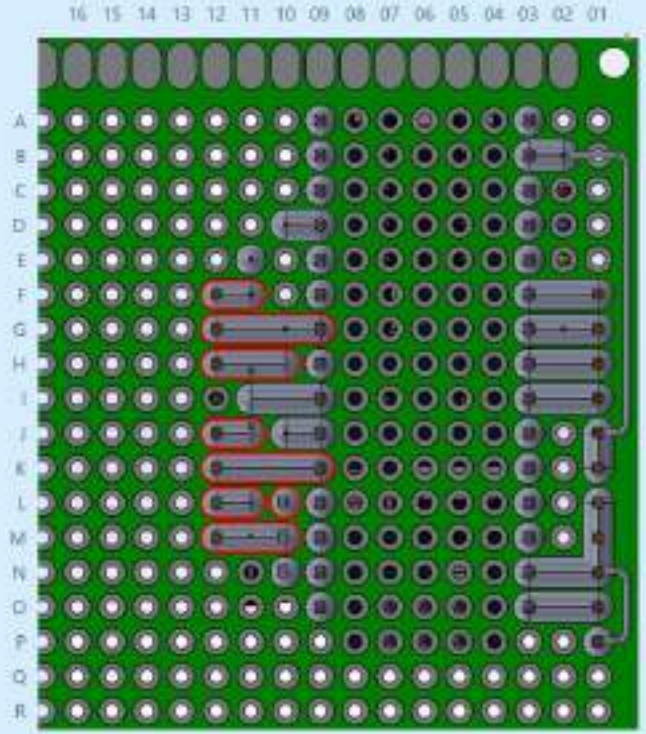



13

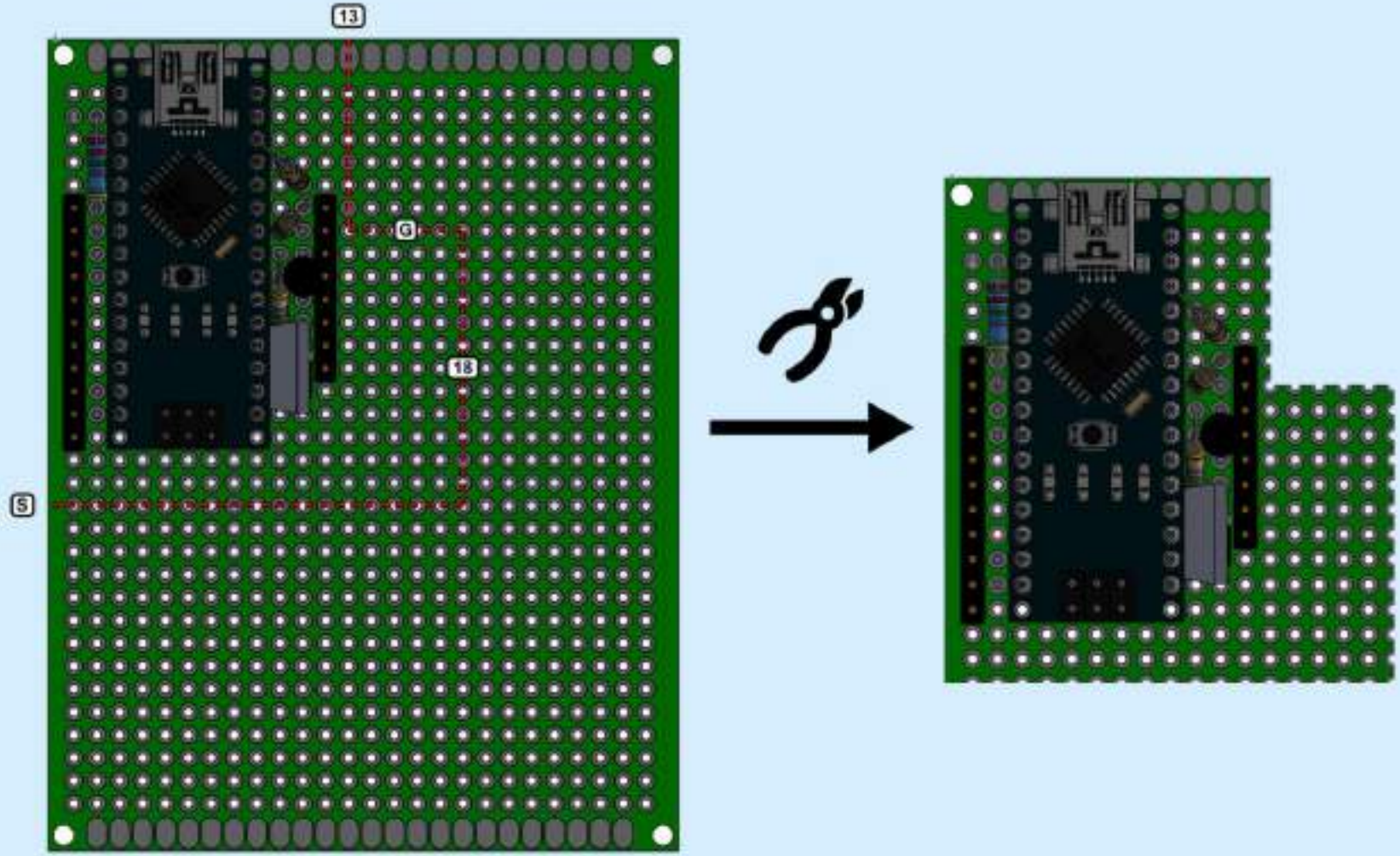

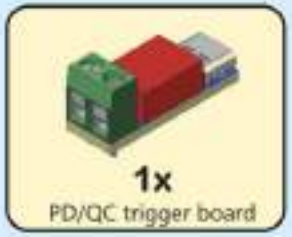

1x
PD/QC trigger board

14

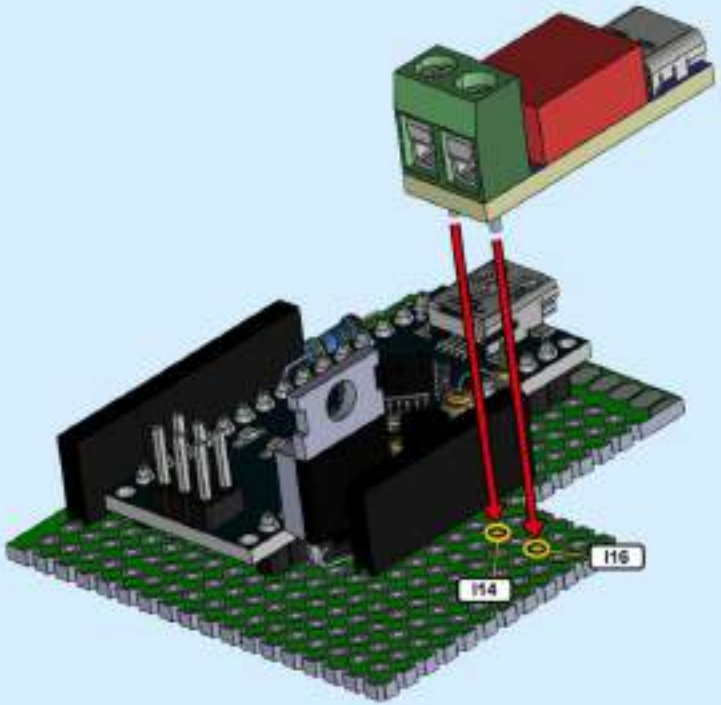

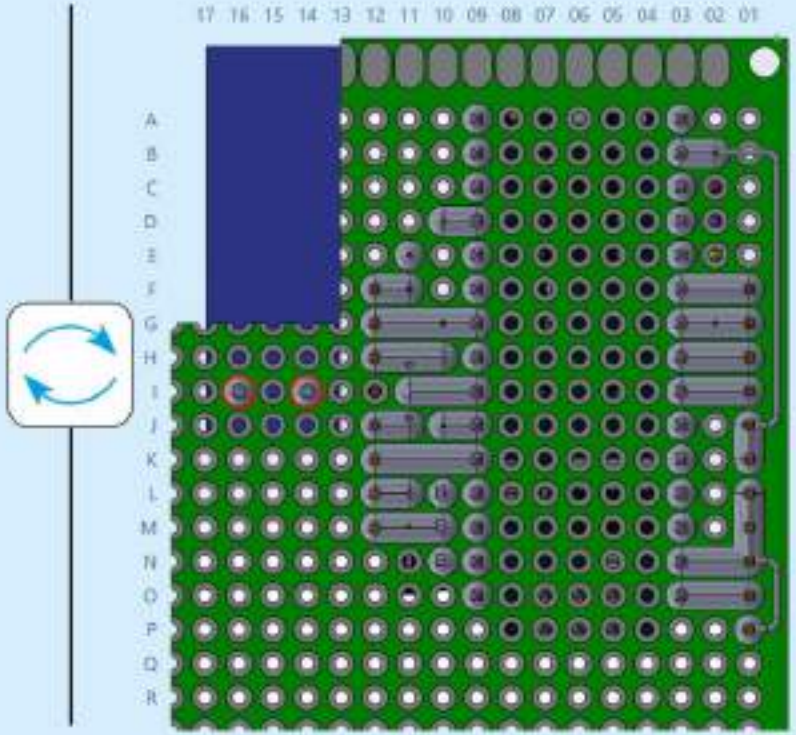



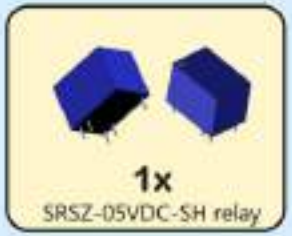

1x
SRSZ-05VDC-SH relay

15

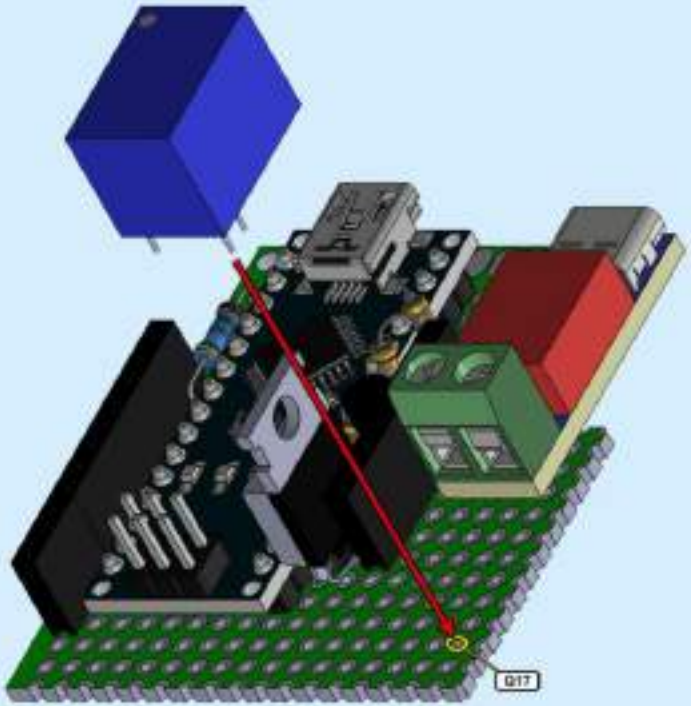

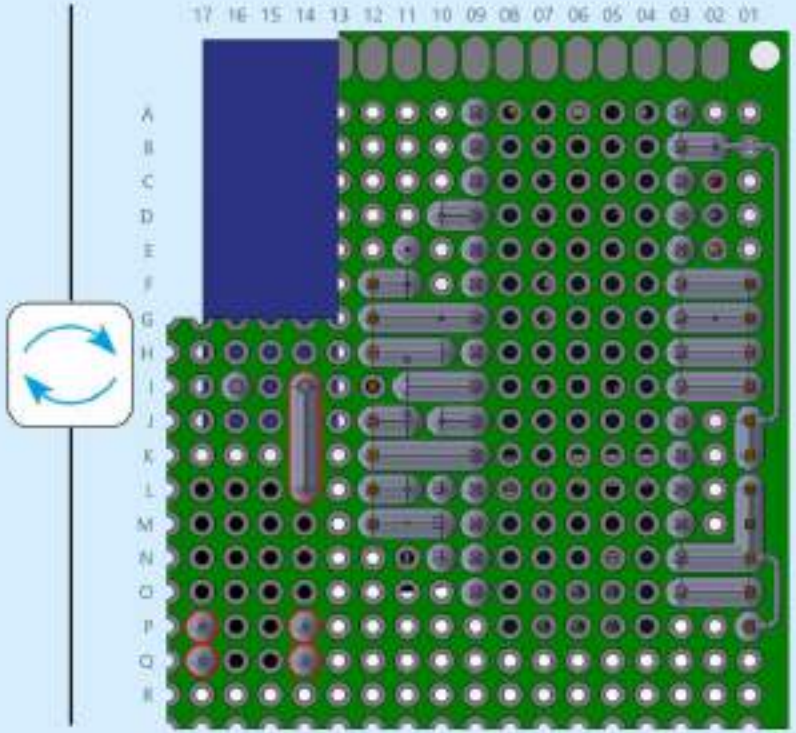



17

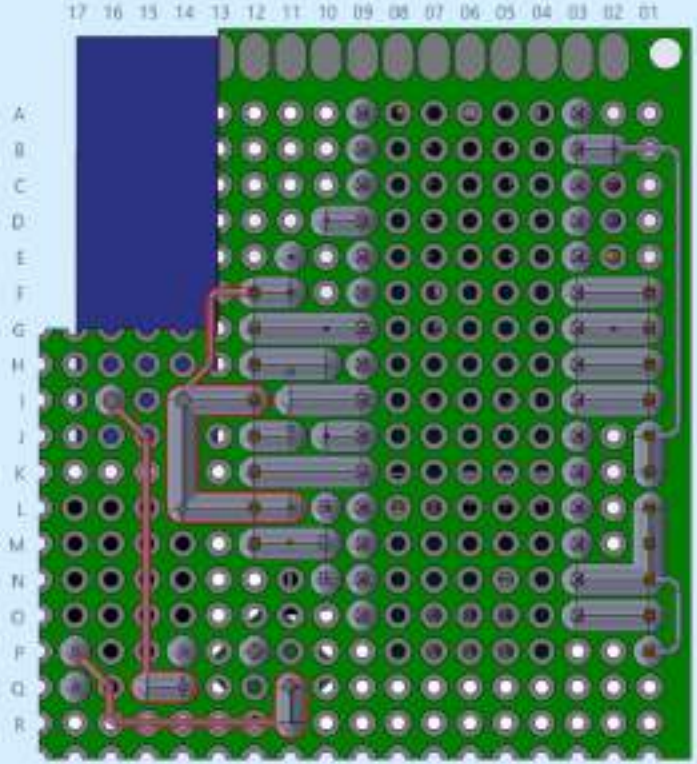
17 16 15 14 13 12 11 10 09 08 07 06 05 04 03 02 01
A
B
C
D
E
F
G
H
I
J
K
L
M
N
O
P
Q
R



18

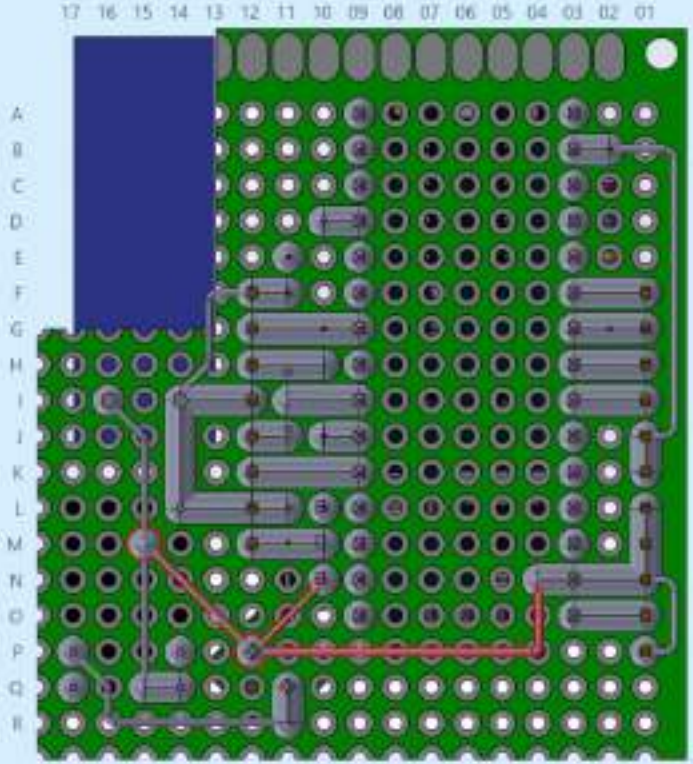
17 16 15 14 13 12 11 10 09 08 07 06 05 04 03 02 01
A
B
C
D
E
F
G
H
I
J
K
L
M
N
O
P
Q
R



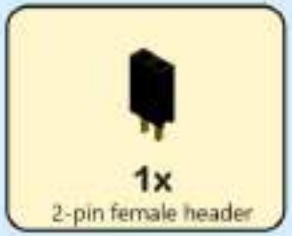

1x
2-pin female header

19

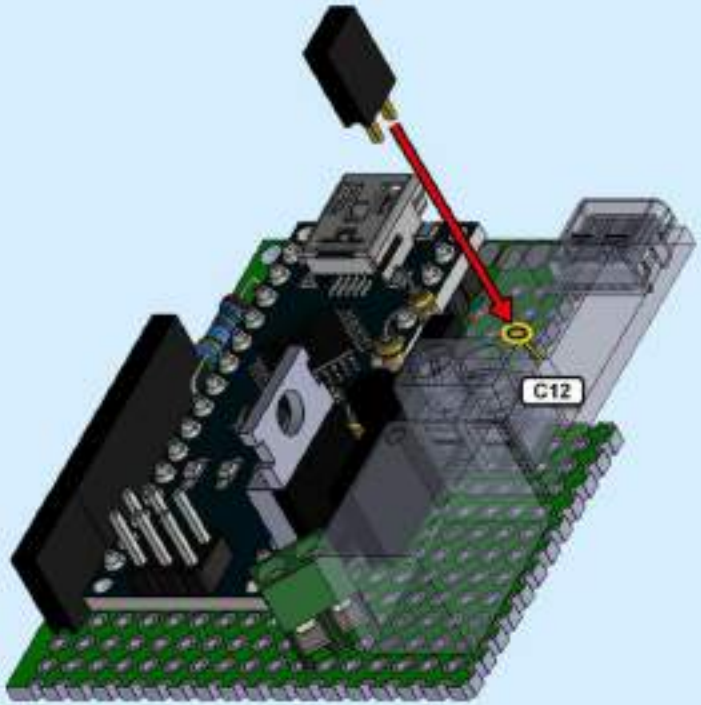

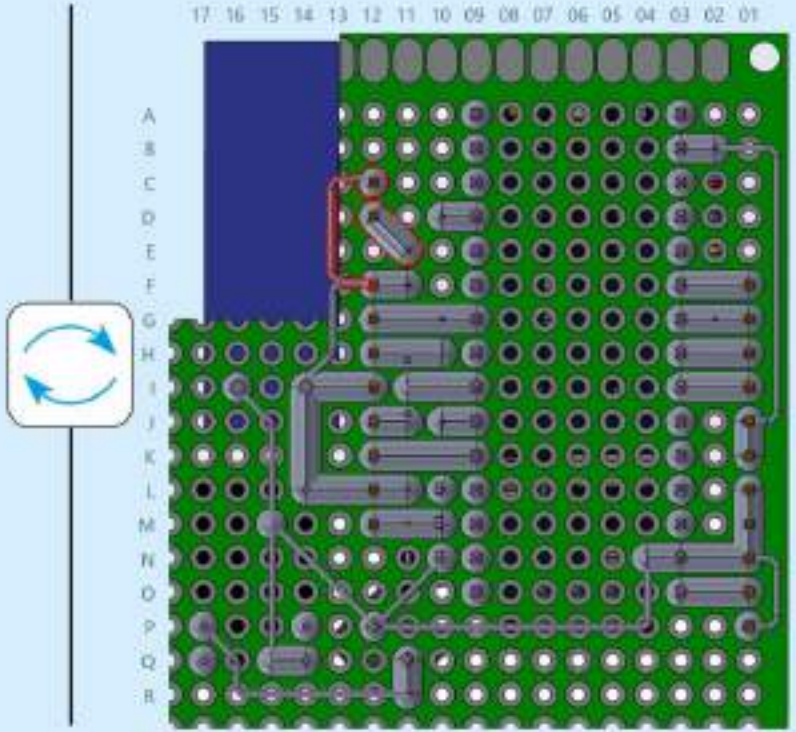



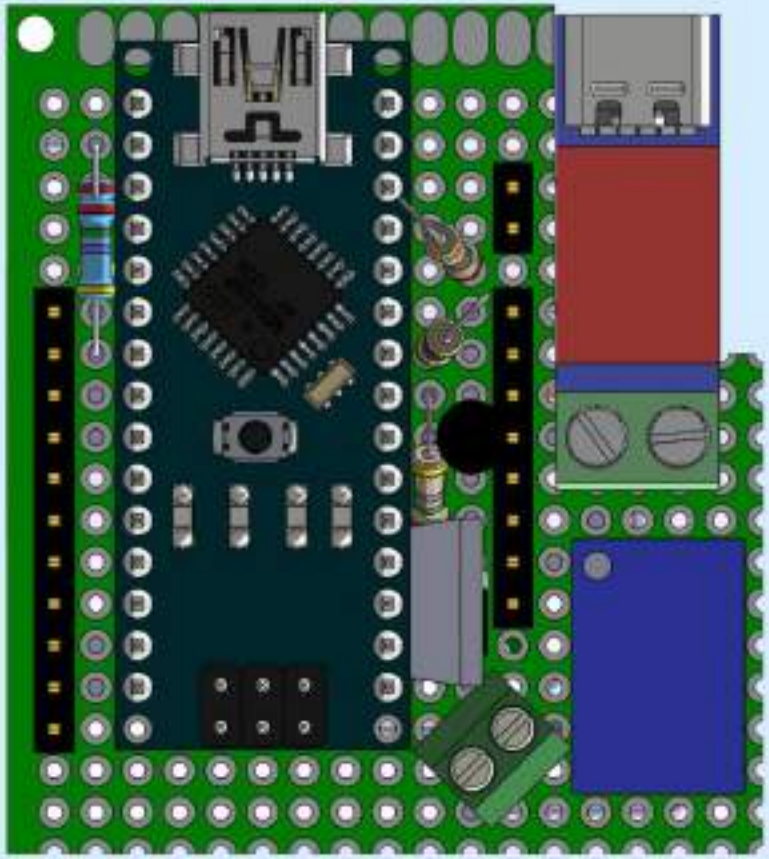

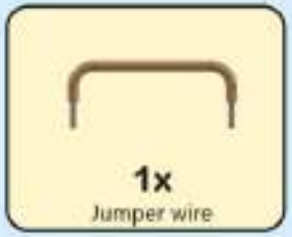

20

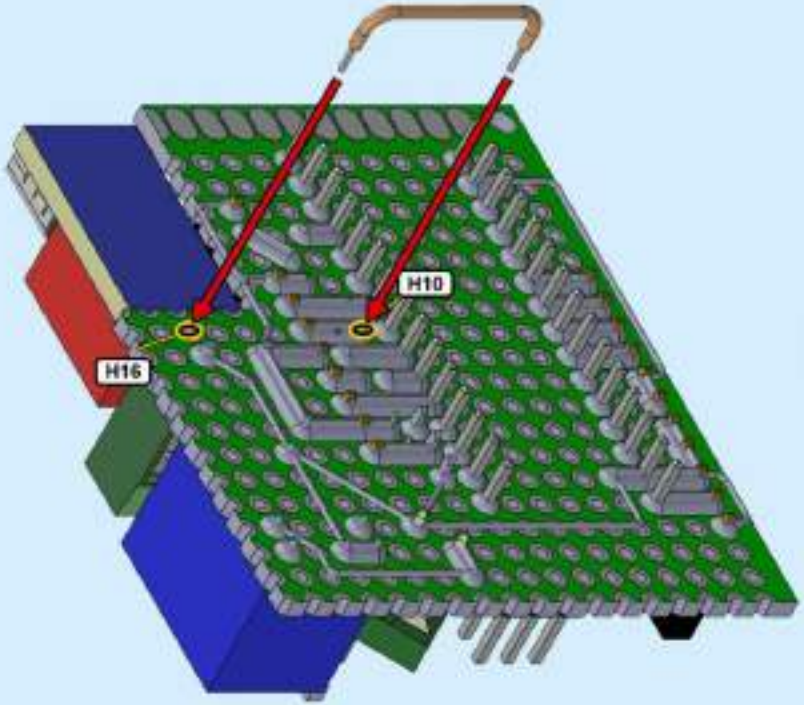



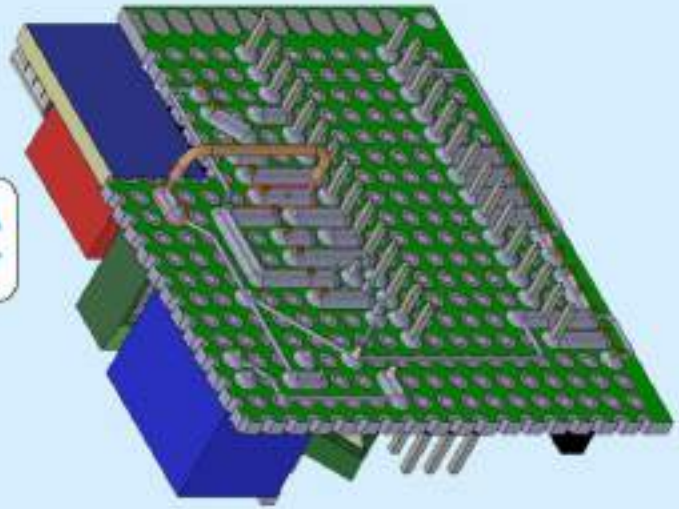



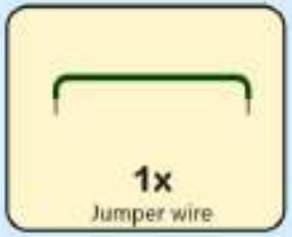

21

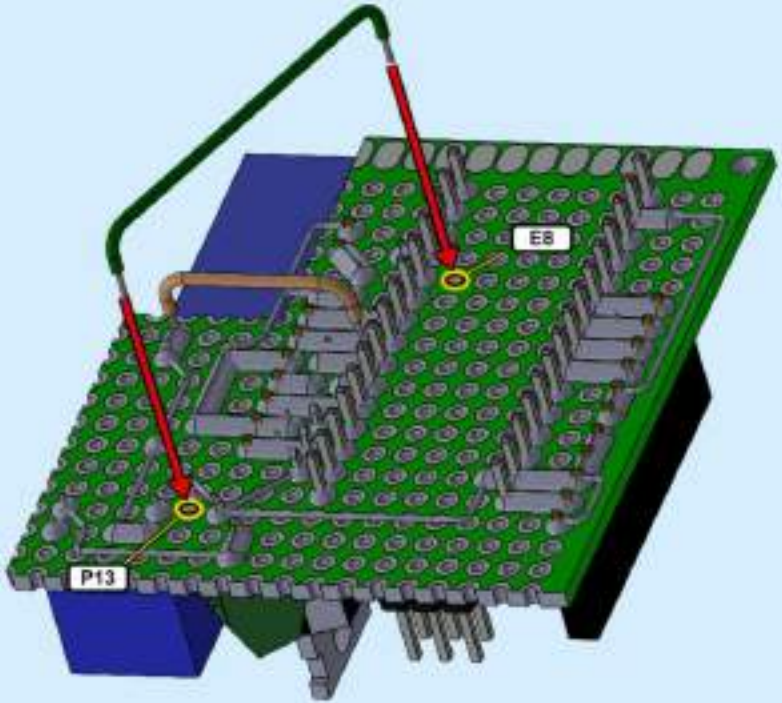



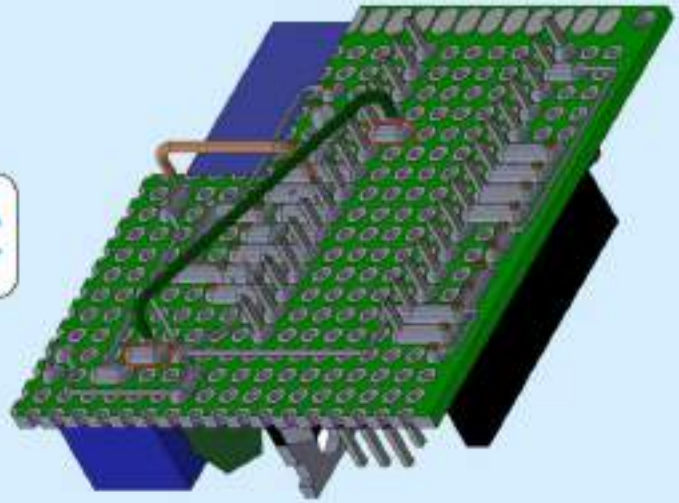



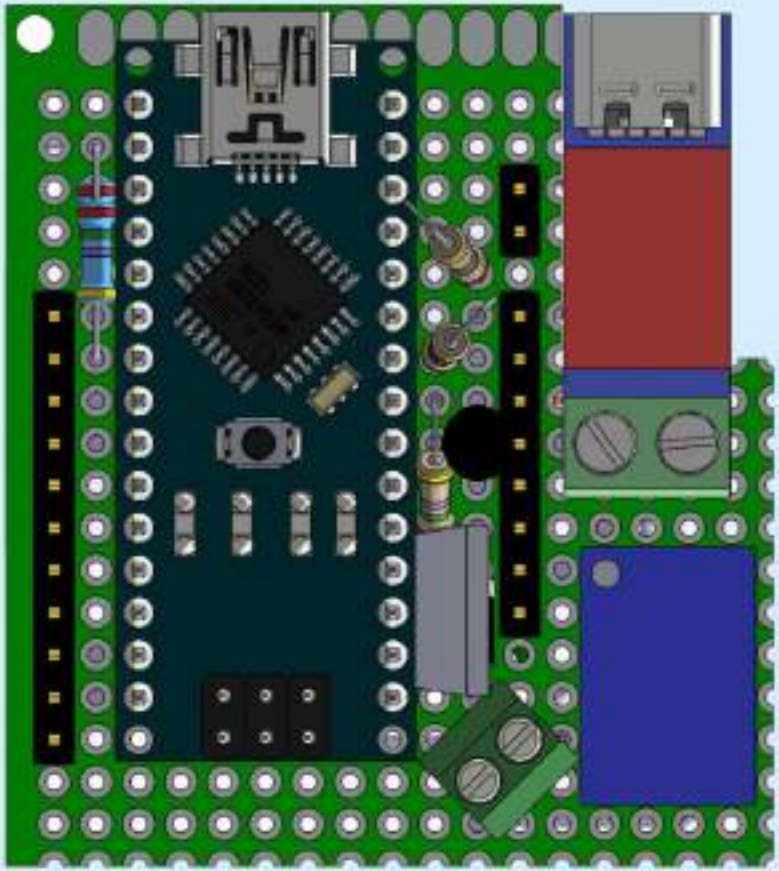

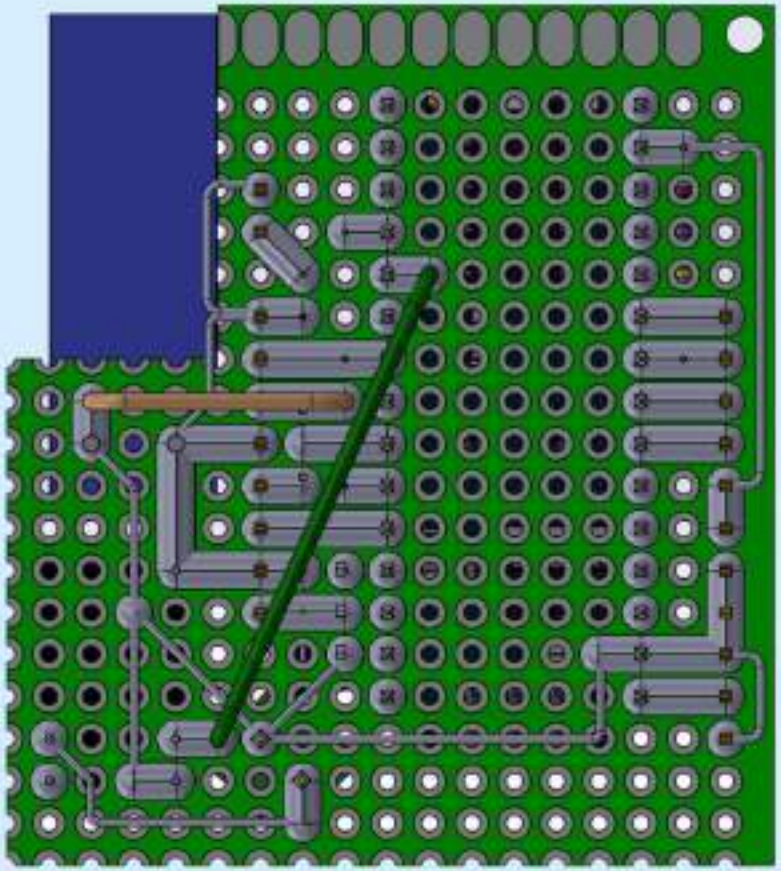



Housings



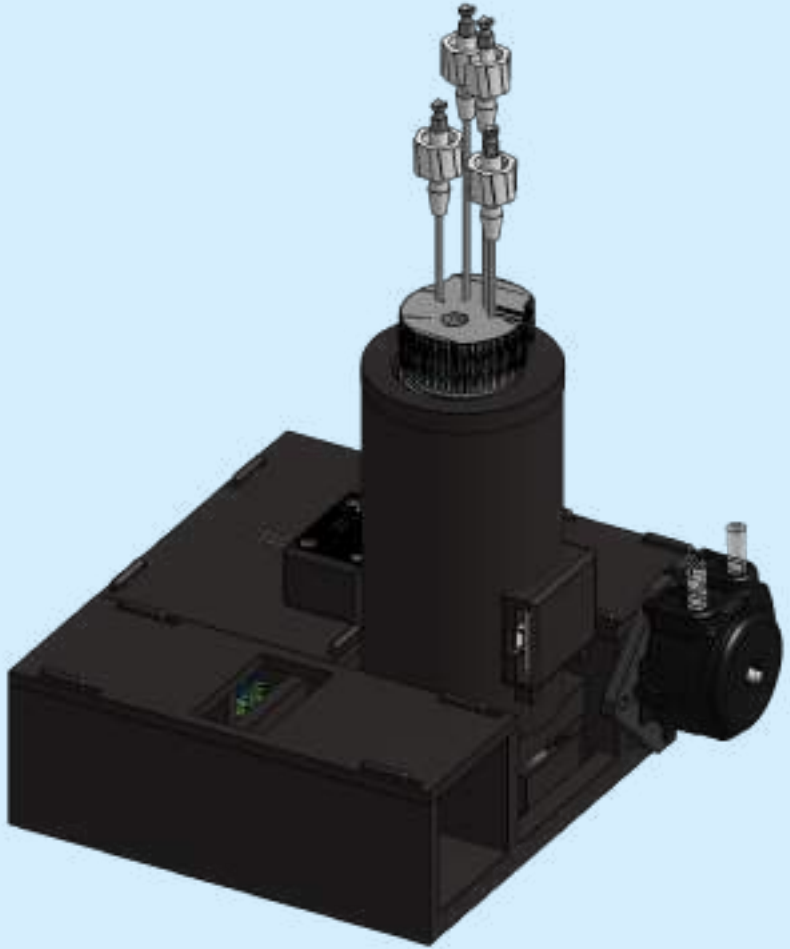

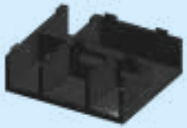

1x
Main Housing

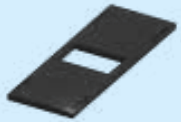

1x
2- Pump Housing

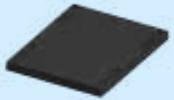

1x
1- Pump Housing

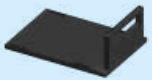

1x
Protoboard Housing



2-6x
Spade Connector



1x
PTC Heater Housing



1x
Thermocouple Probe



1-3x
Peristaltic Pump(s)



1x
Type-C Charger



1x
PTC Heater



1x
USB C-C Cable



1x
Mini-USB - USB-A Cable

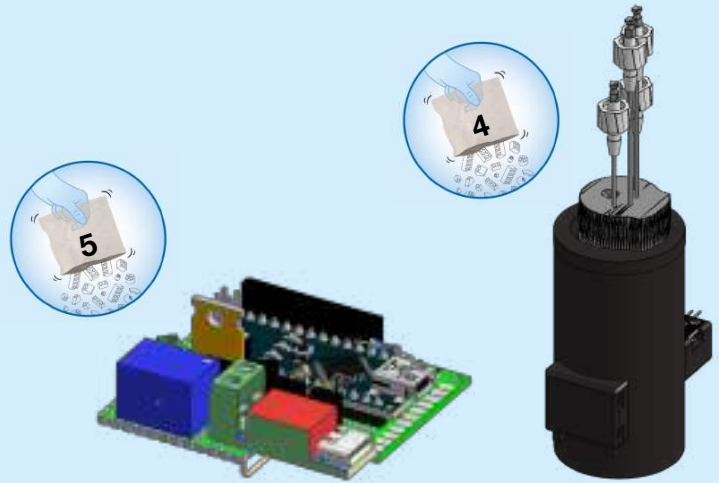



2-6x



2-6x



1-3x



1x

1

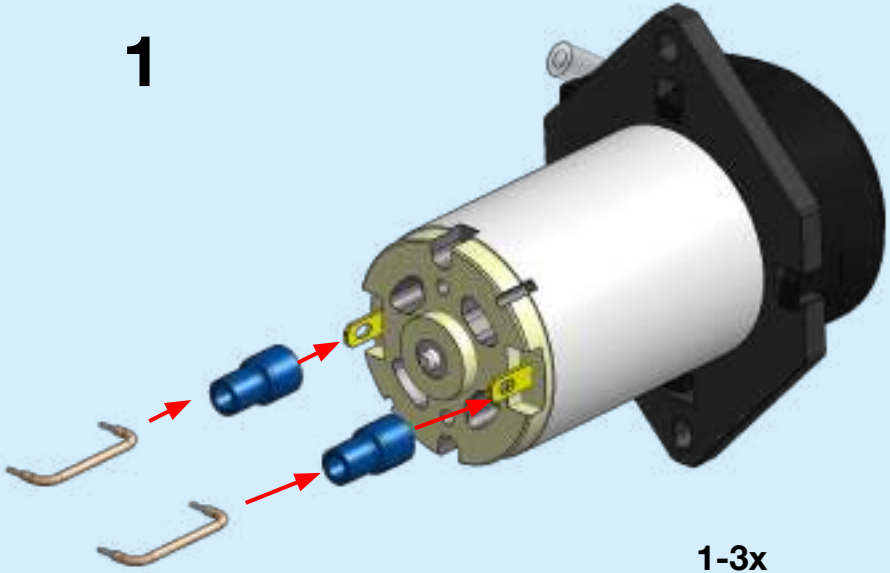

1-3x

2

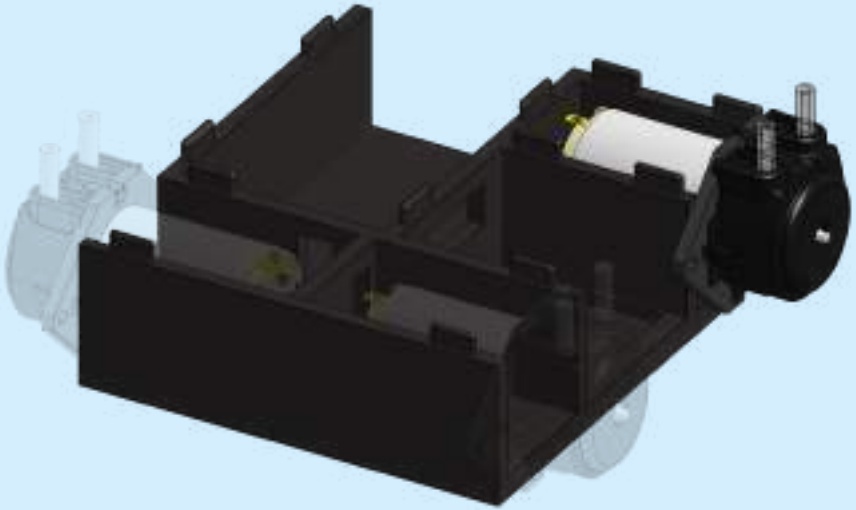

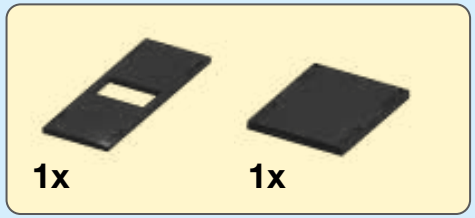

3

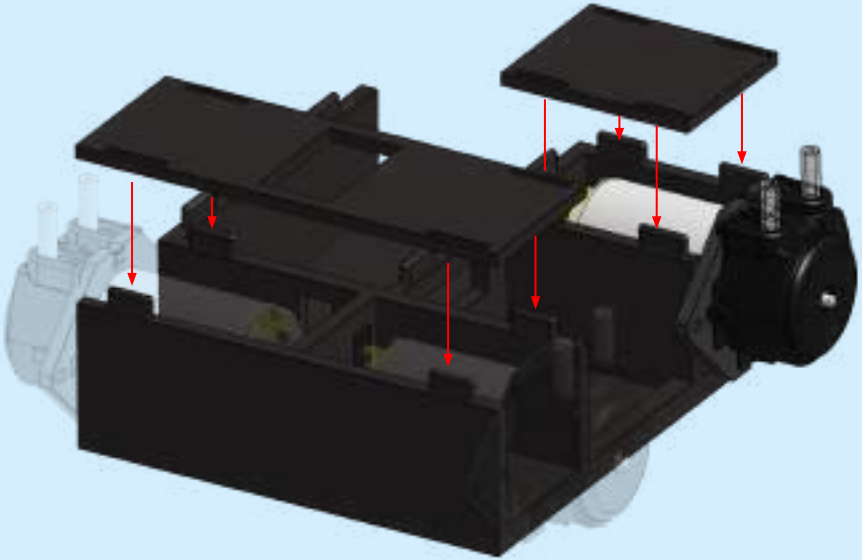

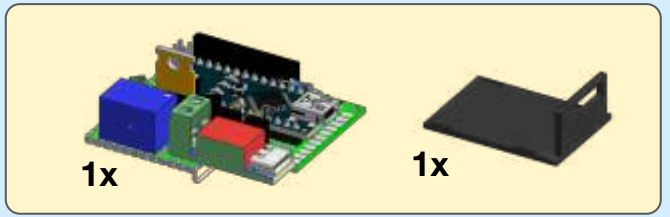

4

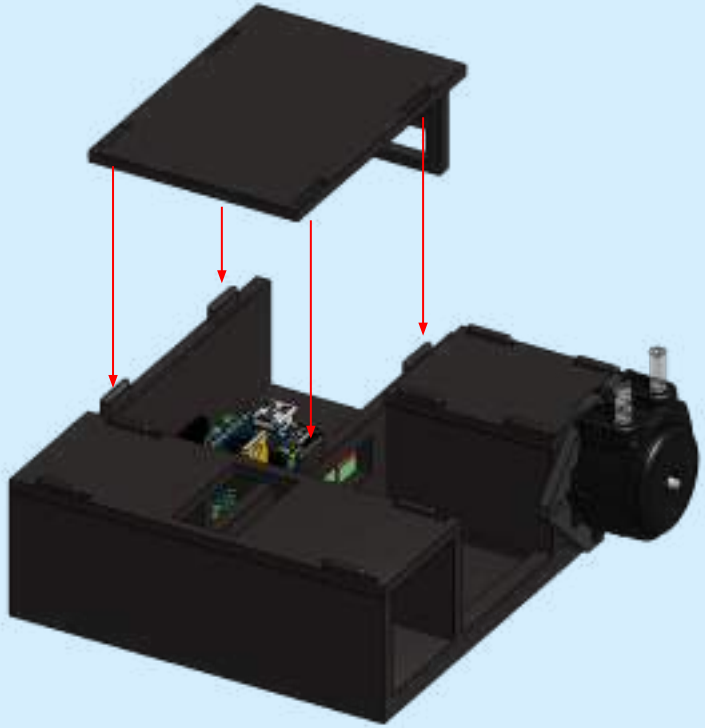



5

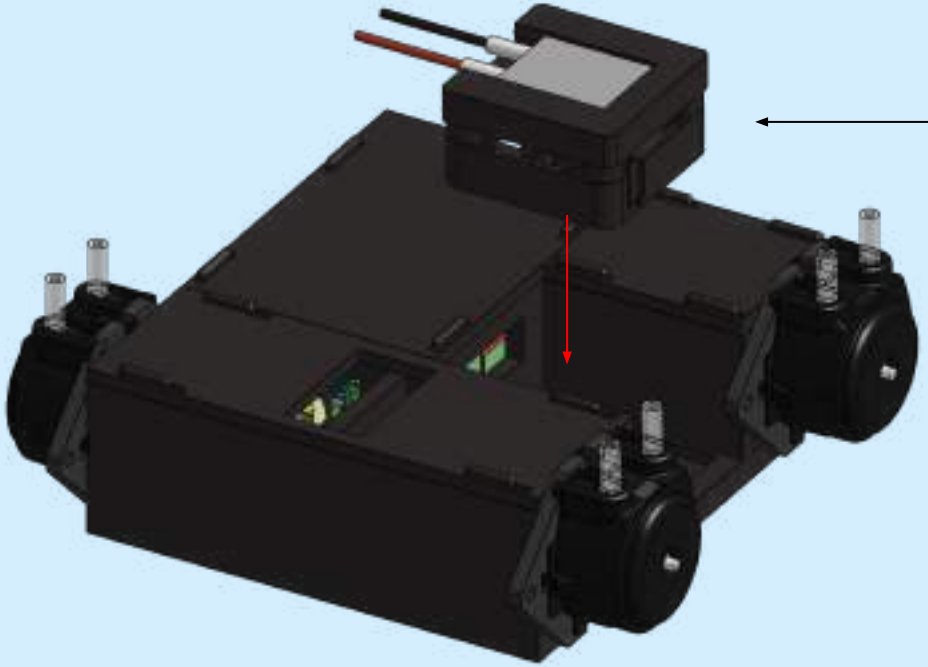

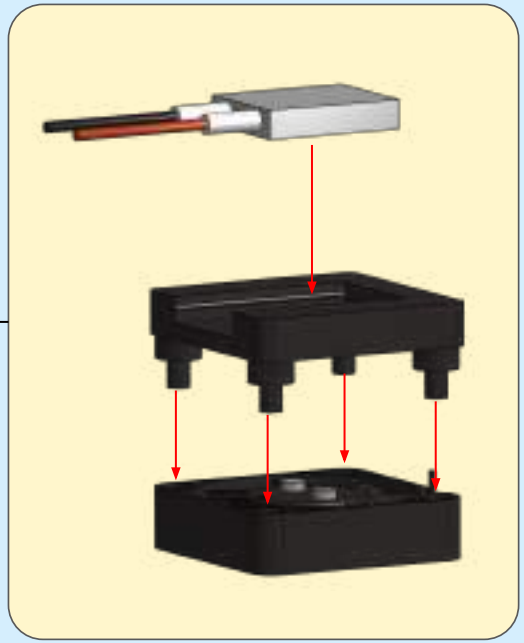



6

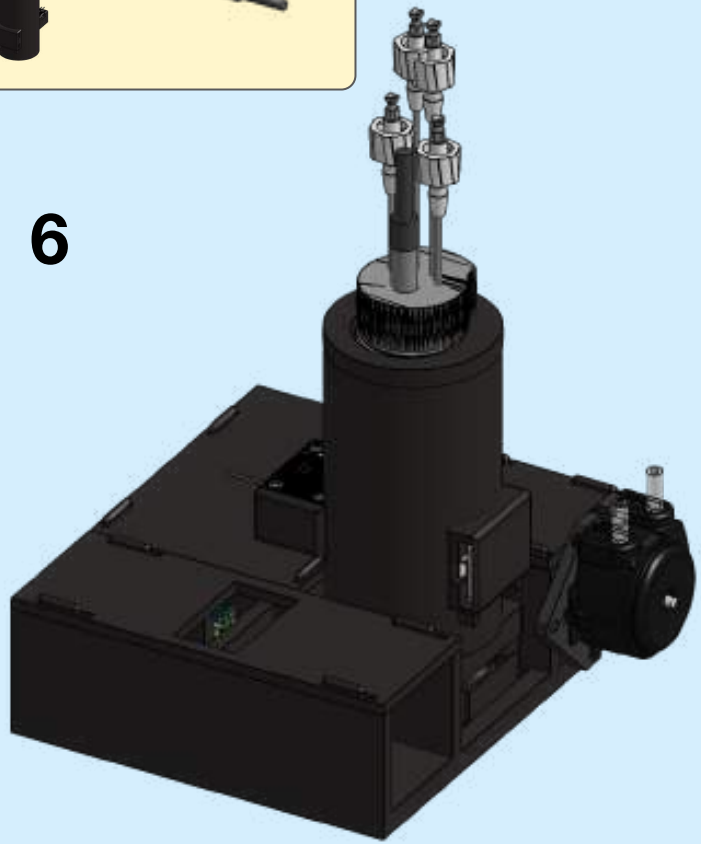

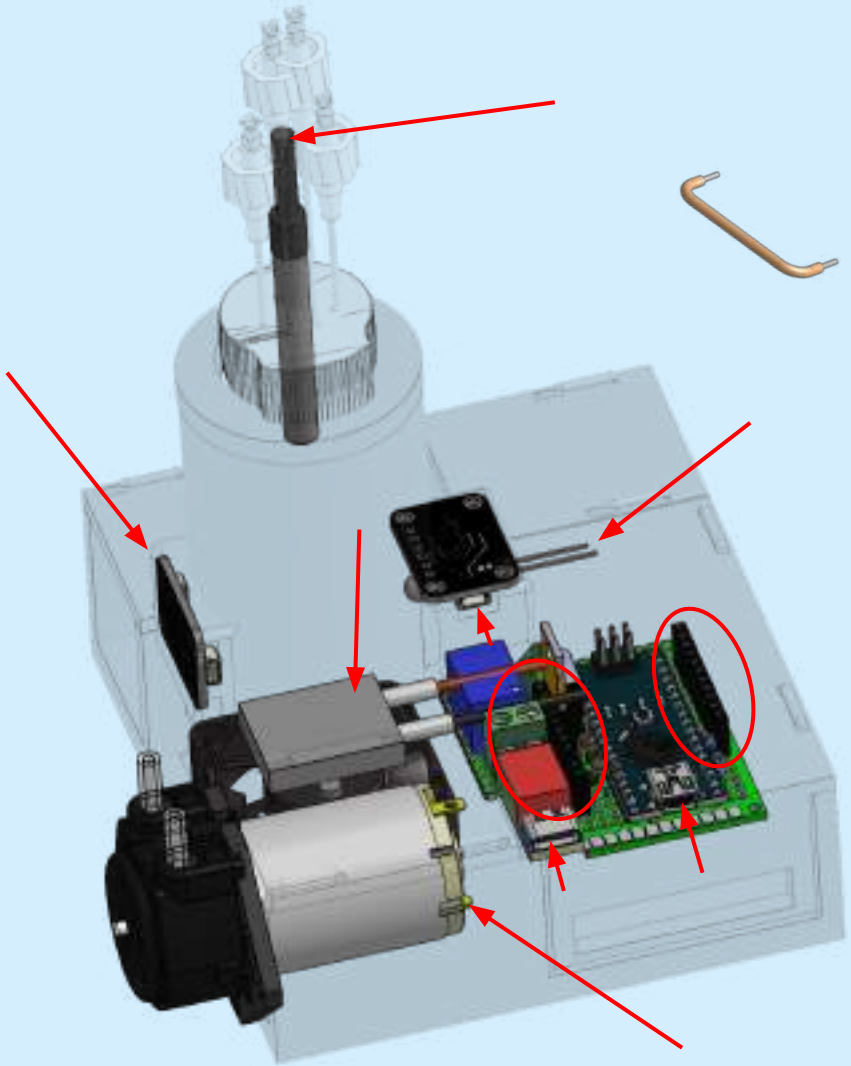

7

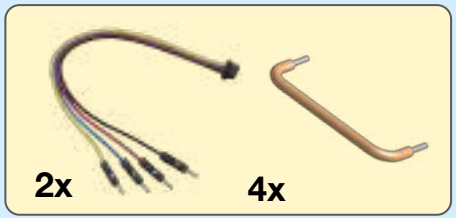

*some wires come attached w/ component

7

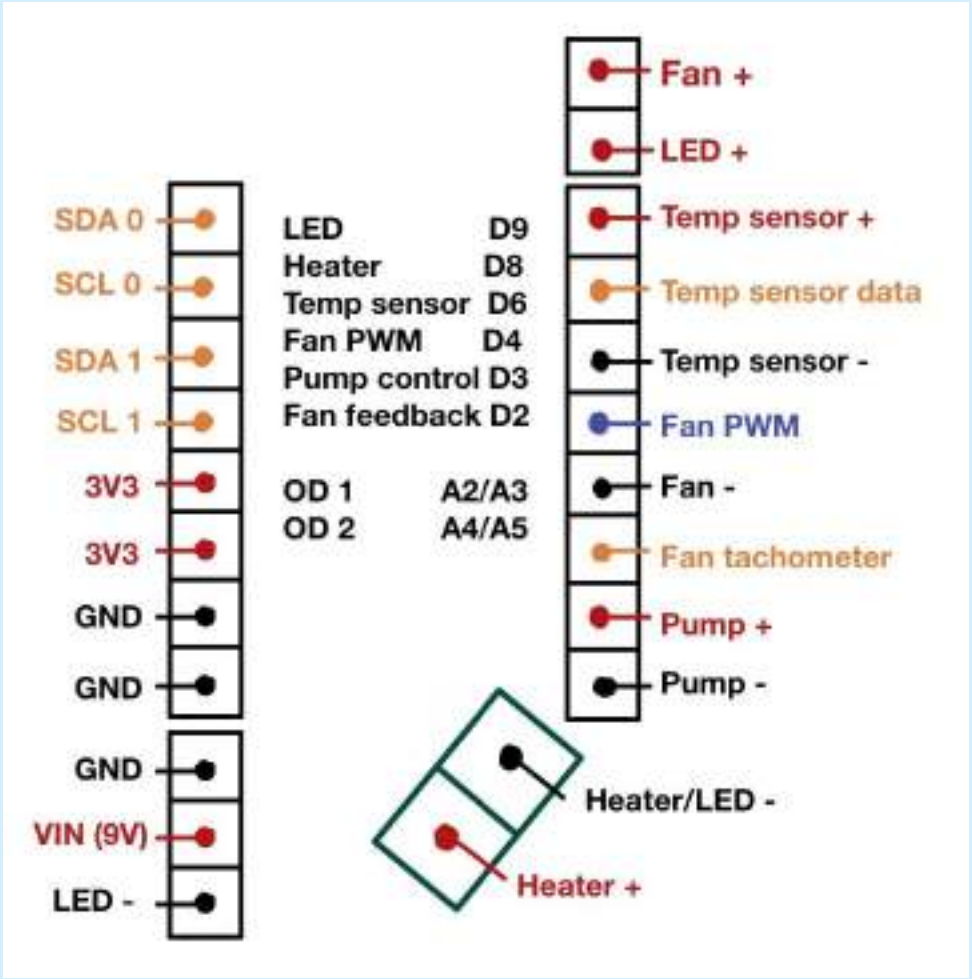
SDA 0
SCL 0
SDA 1
SCL 1
3V3
3V3
GND
GND
GND
VIN (9V)
LED -
LED D9
Heater D8
Temp sensor D6
Fan PWM D4
Pump control D3
Fan feedback D2
OD 1 A2/A3
OD 2 A4/A5
Fan +
LED +
Temp sensor +
Temp sensor data
Temp sensor -
Fan PWM
Fan -
Fan tachometer
Pump +
Pump -
Heater/LED -
Heater +



6

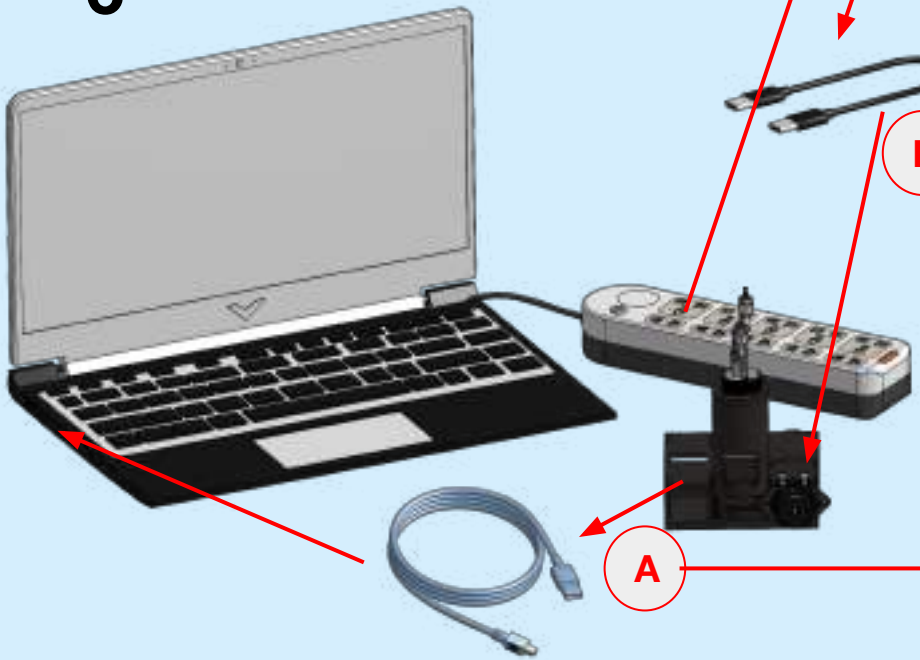

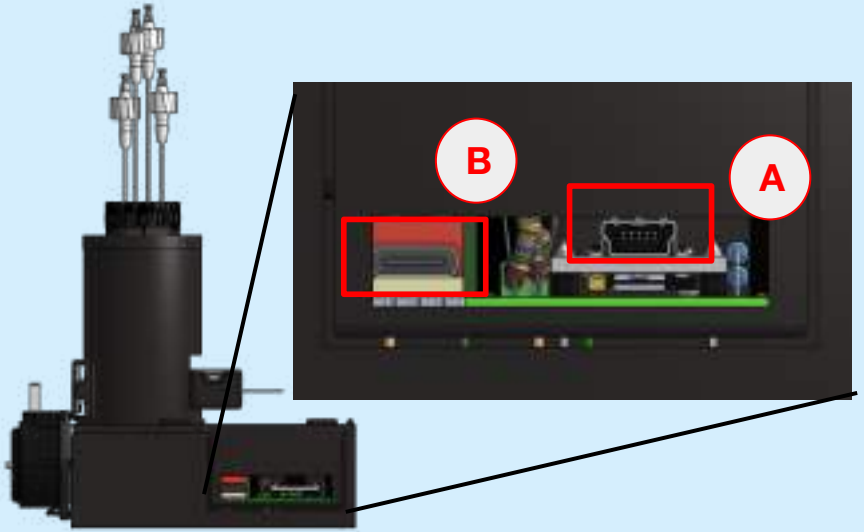

!

Link